EN

Hand-held Pendant Stations/ Handwheels

EUCHNER
More than safety.

EUCHNER

More than safety.

Headquarters in Leinfelden-Echterdingen

Logistics center in Leinfelden-Echterdingen

Production location in Unterböhringen

Internationally successful – the EUCHNER company

EUCHNER GmbH + Co. KG is a world-leading company in the area of industrial safety technology. EUCHNER has been developing and producing high-quality switching systems for mechanical and systems engineering for more than 60 years.
The medium-sized family-operated company based in Leinfelden, Germany, employs around 800 people around the world.

18 subsidiaries and other sales partners in Germany and abroad work for our international success on the market.

Quality and innovation – the EUCHNER products

A look into the past shows EUCHNER to be a company with a great inventive spirit. We take the technological and ecological challenges of the future as an incentive for extraordinary product developments.

EUCHNER safety switches monitor safety doors on machines and installations, help to minimize dangers and risks and thereby reliably protect people and processes. Today, our products range from electromechanical and electronic components to intelligent integrated safety solutions. Safety for people, machines and products is one of our dominant themes.

We define future safety technology with the highest quality standards and reliable technology. Extraordinary solutions ensure the great satisfaction of our customers. The product ranges are subdivided as follows:

- Transponder-coded Safety Switches
- Transponder-coded Safety Switches with guard locking
- Multifunctional Gate Box MGB
- Access management systems (Electronic-Key-System EKS)
- Electromechanical Safety Switches
- Magnetically coded Safety Switches
- Enabling Switches
- Safety Relays
- Emergency Stop Devices
- Hand-Held Pendant Stations and Handwheels
- Safety Switches with AS-Interface
- Joystick Switches
- Position Switches

made in Germany

Contents

Hand-held Pendant Stations/Handwheels

About this catalog

The *Hand-held Pendant Stations/Handwheels* catalog provides you with an overview of our HBA, HBM and HBL series hand-held pendant stations as well as our HK and HW series handwheels.

Due to their precision, their ergonomic design and their robustness, these products are the right choice for numerous applications. You will find the technical data after the product overview.

You will find the following series and accessories in this catalog:

Hand-held pendant stations/handwheels											
Hand-held pendant stations						Handwheels					
Complete devices			Kit	Accesso-ries	Holder	Magnetic detent mechanism			Mechanical detent mechanism		Accesso-ries
HBA	HBM	HBL				HKB	HKC	HKD	HWA	HWB	
											
See page 10	See page 20	See page 24	See page 29	See page 45	See page 58	See page 62	See page 64	See page 66	See page 68	See page 70	See page 72

How can I find the right product?

There are two ways you can find the right product:

1. If you know the order number or the item designation, look for the product directly in the item index (see page 81 or page 83).
2. If you have specific requirements, refine the selection step-by-step with the aid of the table of contents and the selection tables.

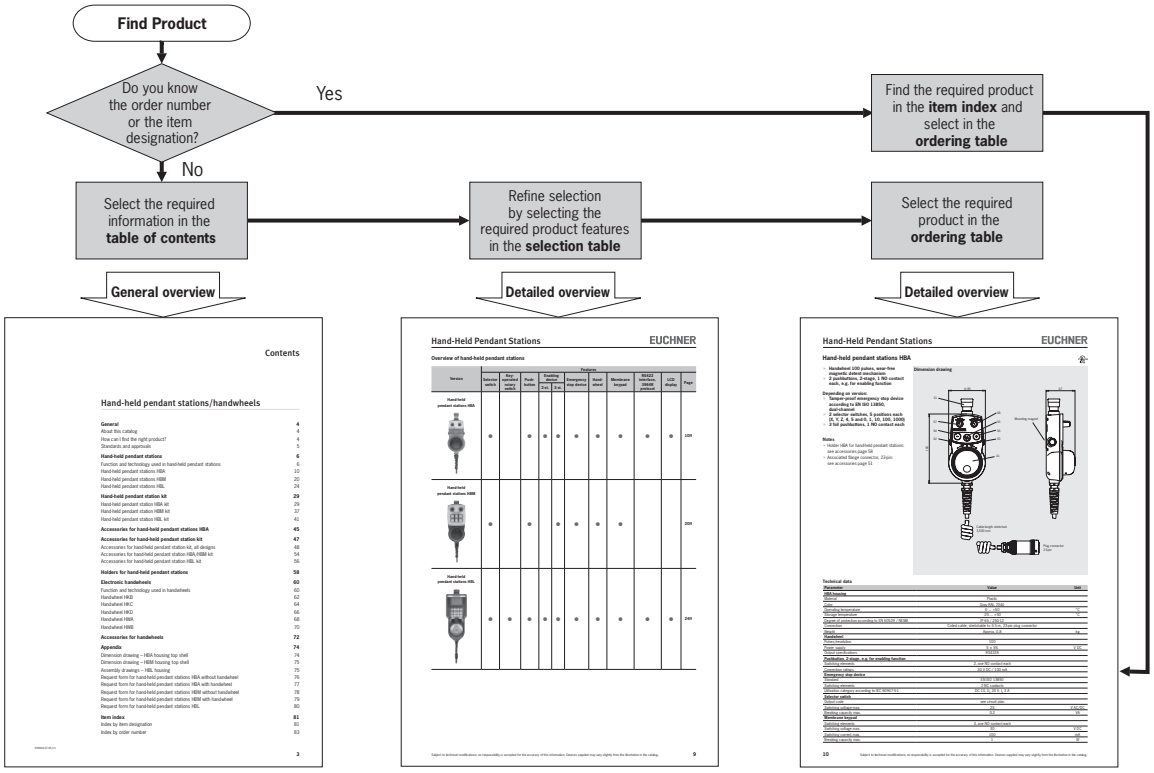

Standards and approvals

Standards

Hand-held pendant stations must comply with the requirements of the EMC directive 2004/108/EC. The EMC directive has been implemented in national law in the EU member states and, as a result, is binding for all manufacturers. Detailed requirements on EMC are defined in EN 61000 (electromagnetic compatibility EMC) part 6-2 and 6-4. If the requirements of this standard are met, conformity with the applicable laws and therefore with the EMC directive is assumed. EUCHNER hand-held pendant stations comply with the relevant standards and therefore help you to comply with the requirements during the design of your machinery.

Approvals

Many of the hand-held pendant stations given in this catalog are listed by Underwriters Laboratories (UL). The approval symbols on the individual pages of the catalog indicate which devices are approved.
This is the UL approval symbol:

c UL us LISTED	Products with this symbol are approved by Underwriters Laboratories (UL, Canada and USA)

Function and technology used in hand-held pendant stations

The most important machine functions can be monitored, e.g. axis selection and axis movement, can be controlled decentrally using hand-held pendant stations. The freedom of movement of the machine operator is increased, and the operator can monitor and control processes without being tied to a fixed control panel.
In addition to the control function, hand-held pendant stations can also have a safety function. For this purpose, the hand-held pendant stations are equipped with emergency stop buttons and enabling switches.

Hand-held pendant stations with enabling function

Hand-held pendant stations with enabling function are essentially similar to classic enabling switches.
Enabling switches are manually operated control devices that, together with other control switches, enable commands related to potentially hazardous conditions to be run, as long as the enabling switches are actuated continuously. These switches are used wherever personnel must work directly in the danger area on machines and systems. This is necessary, e.g. during setting up, programming, testing or servicing work. As per annex 1 of the Machinery Directive, the protective action of movable safety guards can be disabled in these operating modes. The Machinery Directive places the condition that these operating modes must be secured using a lockable device (e.g. key-operated rotary switch) and machine operation is only allowed to be triggered by a second, separate action. To enable the operator in the danger area of a machine to trigger a machine movement, an enabling device should also be actuated.
The operator must also be able to stop the machine movement using the enabling device. This task is performed by the enabling switch. Every person who is in the hazardous area must carry an enabling device so that suitable action can be taken in case of danger.

Two-stage or three-stage enabling switch?

The operator can only start a machine movement if he/she actuates the enabling device and keeps it in the actuated position. The movement is stopped again when the switch is released. All pushbuttons and all 3-stage enabling switches feature this two-stage function (OFF-ON).
However, experience shows that the operator often clenches the enabling device in an emergency.
In this case a three-stage enabling switch is better and is specifically requested in many C standards. This switch has three switch positions (OFF-ON-OFF) and, if the operator clenches the switch, it is actuated beyond the enabling position (middle position) and the machine is shut down as a result.
If a 2-stage pushbutton is used, it must also be ensured that, in an emergency, the operator is in a position to activate an emergency stop device in close proximity (VDI 2853). To identify the type of enabling device in the catalog, the following symbols are used:

Symbol for a 2-stage pushbutton

Symbol for a 3-stage enabling switch

Function sequence of two-stage pushbutton

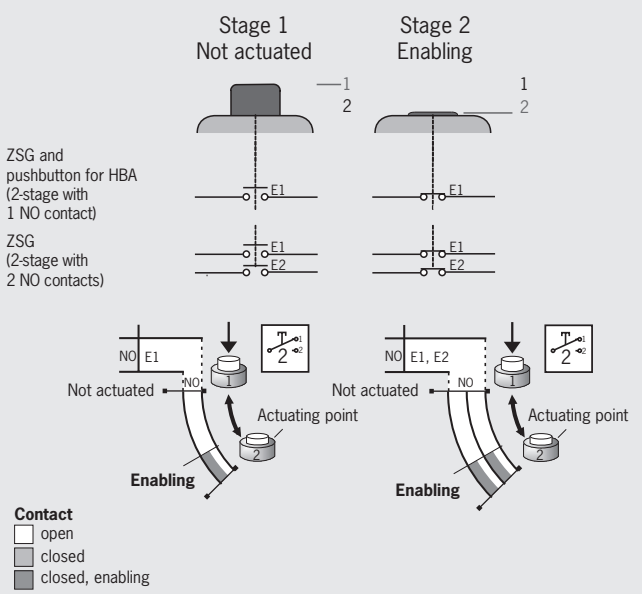

2-stage pushbutton

Function sequence of three-stage enabling switch

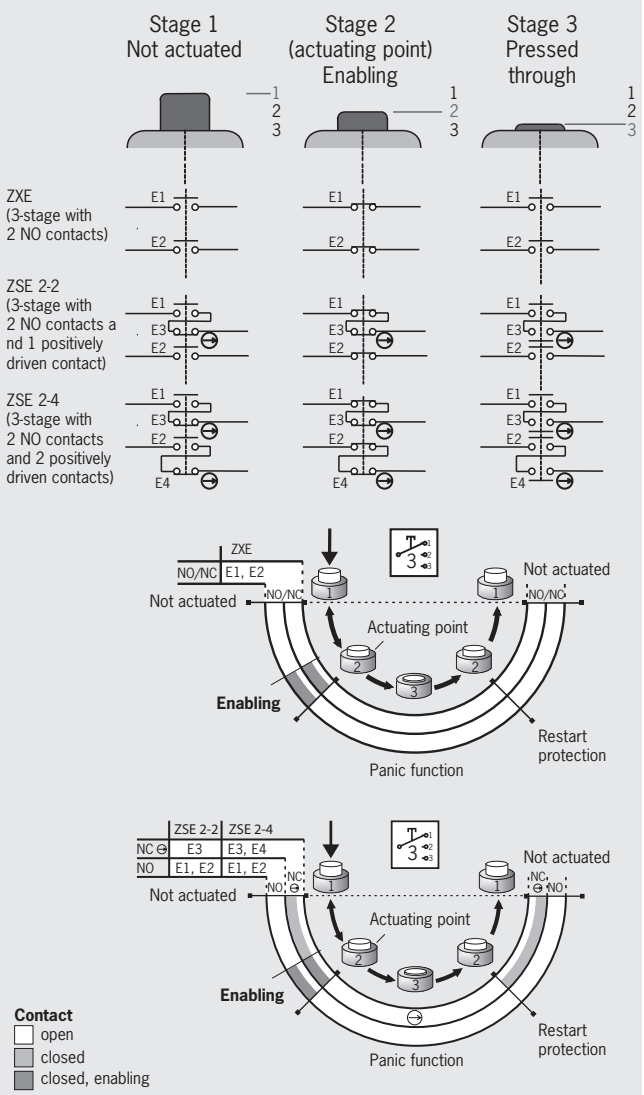

3-stage enabling switch

As can be clearly seen in the figure, the enabling function can only be achieved at stage 2. This function is provided by the closing of the normally open contacts (NO = E1 and E2).
If the button is released, that is back from stage 2 to stage 1, the normally open contacts are opened again. The 2-stage pushbuttons and 3-stage enabling switches are identical in this function.
If, in this example, the button on a 3-stage enabling switch is pressed past the actuating point (stage 2) in panic (to stage 3), then not only the normally open contacts (NO) are reset, but also the safe positively driven contacts (NC ⊖) in case of the ZSE series.
The patented switch system ensures that the enabling function does not become active at stage 2 on the resetting of the pushbutton from stage 3 to stage 1. In this example, the enable can only be given if normally open and normally closed contacts are closed at the same time. This situation is only possible on actuation from stage 1 to stage 2. In the other direction, from stage 3 to stage 1, stage 2 is skipped and unintentional re-starting prevented.
Once the pushbutton has reached stage 1, the function sequence can be started again.
Due to its design, the switch unit also provides a wear-free, constant actuating point (stage 2).

Ergonomic housing

To make the operation of machines even easier and safer for the user, EUCHNER is the first manufacturer of hand-held pendant stations to have designed the housing taking into account ergonomic aspects. This means the HBA, HBM and HBL housings have been developed such that they fit optimally in the hand. Well-known manufacturers of machine tools and control systems all over the world are already using EUCHNER hand-held pendant stations. The wide product range extends from standard housings to custom-built hand-held pendant stations, e.g. with LCD displays, membrane keypads and serial communication ports.

Design prize for hand-held pendant station HBA

Custom hand-held pendant stations

Customized hand-held pendant stations based on the standard devices can also be produced in small quantities. In order to use these ergonomically designed housings for the various requirements, EUCHNER offers the option of customized solutions. In the Appendix, you will find forms which can be used to describe your requirements. We will be happy to draw up a quotation based on your requirements.

Hand-held pendant stations from EUCHNER
Hand-held pendant stations from EUCHNER are characterized by their robust, ergonomic and attractive design. They are used to control axis movements of machines in setup mode, for example. The modular design of every unit permits an individual combination of safety components and functions as required by the customer. Depending on the size required and the functions to be integrated, EUCHNER offers three different types of hand-held pendant stations:

- HBA

The HBA is the smallest and handiest of the hand-held pendant stations from EUCHNER. Its compact size allows the HBA to be fastened on the machine without taking up much space. Its low weight permits comfortable working and operation, even over extended periods.

- HBM

The HBM is based on the ergonomic shape of the HBA. It additionally offers more space and greater flexibility for integrating more components and functions.

- HBL

The HBL is the largest hand-held pendant station from EUCHNER. It is especially robust and offers maximum flexibility for custom combination of components, even components with a larger depth.

Kits for hand-held pendant stations

To enable you to use ergonomically designed housings even for small quantities, e.g. prototypes or special versions, EUCHNER provides kits for hand-held pendant stations. As a result you can assemble a hand-held pendant station in a user-friendly housing to suit your requirements.

Explanation of symbols and notation

Symbols and specific notation related to the switches or the switching contact are used time and again in the catalog.
The following example is intended to explain these aspects:

- *Notation 1 NC ⊖ + 1 NO*

Explanation:
Normally closed contacts are termed NC, normally open contacts NO.
The number indicates how many contacts are available. The symbol ⊖ behind the NC defines that the NC contact is a positively driven contact. This switch therefore has one normally closed contact and one normally open contact; the normally closed contact is a positively driven contact.

Overview of hand-held pendant stations

Version	Features										
	Selector switch	Key-operated rotary switch	Push-button	Enabling device		Emergency stop device	Hand-wheel	Membrane keypad	RS422 interface, 3964R protocol	LCD display	Page
				2-st.	3-st.						
Hand-held pendant stations HBA 	●		●	●	●	●	●	●	●	●	10ff
Hand-held pendant stations HBM 	●		●		●	●	●	●			20ff
Hand-held pendant stations HBL 	●	●	●	●	●	●	●	●	●	●	24ff

Hand-held pendant stations HBA

- **Handwheel 100 pulses, wear-free magnetic detent mechanism**
- **2 pushbuttons, 2-stage, 1 NO contact each, e.g. for enabling function**

Depending on version:
- **Tamper-proof emergency stop device according to EN ISO 13850, dual-channel**
- **2 selector switches, 5 positions each (X, Y, Z, 4, 5 and 0, 1, 10, 100, 1000)**
- **3 foil pushbuttons, 1 NO contact each**

Notes
- Holder HBA for hand-held pendant stations: see accessories page 58
- Associated flange connector, 23-pin: see accessories page 51

Dimension drawing

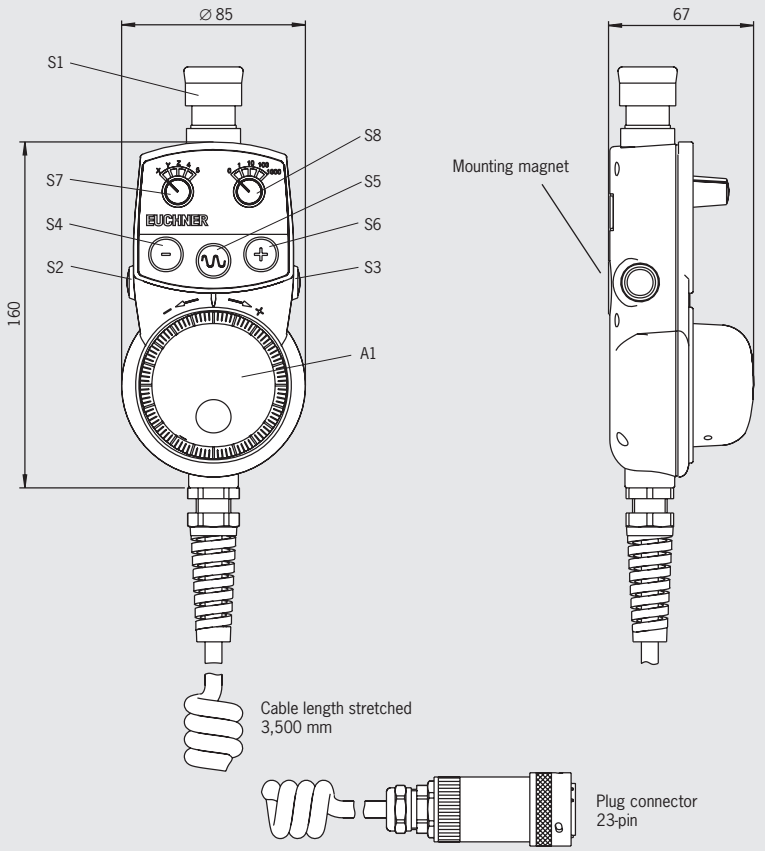

Technical data

Parameter	Value	Unit
HBA housing		
Material	Plastic	
Color	Gray RAL 7040	
Operating temperature	0 ... +50	°C
Storage temperature	-20 ... +50	°C
Degree of protection according to EN 60529 / NEMA	IP 65 / 250-12	
Connection	Coiled cable, stretchable to 3.5 m, 23-pin plug connector	
Weight	Approx. 0.8	kg
Handwheel		
Pulses/revolution	100	
Power supply	5 ± 5%	V DC
Output specifications	RS422A	
Pushbutton, 2-stage, e.g. for enabling function		
Switching elements	2, one NO contact each	
Connection ratings	30 V DC / 100 mA	
Emergency stop device		
Standard	EN ISO 13850	
Switching elements	2 NC contacts	
Utilization category according to IEC 60947-5-1	DC-13, U_e 24 V, I_e 3 A	
Selector switch		
Output code	see circuit plan	
Switching voltage max.	25	V AC/DC
Breaking capacity max.	0.2	VA
Membrane keypad		
Switching elements	3, one NO contact each	
Switching voltage max.	30	V DC
Switching current max.	100	mA
Breaking capacity max.	1	W

Ordering table

Version/item	Features					Order no.
	2 selector switches 5 positions each S7, S8	3 foil push-buttons, 1 NO contact each S4, S5, S6	2 pushbuttons 2-stage S2, S3	Emergency stop device S1	Handwheel 100 pulses A1	
HBA-079828 			●		●	**079828**
HBA-079826 	●		●	●	●	**079826**
HBA-072936 		●	●	●	●	**072936**
HBA-079827 	●	●	●	●	●	**079827**

Circuit plan

S8:
Increment selection
Selector switch right
5 positions

S8	DCBA	
1	0000	0
2	0001	1
3	0011	10
4	0010	100
5	0110	1000

S7:
Axle selection
Selector switch left
5 positions

S7	DCBA	
1	0000	X
2	0001	Y
3	0011	Z
4	0010	4
5	0110	5

S4:
Push button left
S5:
Push button middle
S6:
Push button right

S2 (left) + S3 (right):
Pushbutton 2-stage
e.g. for
enabling function

S1:
Emergency Stop

A1:
Handwheel

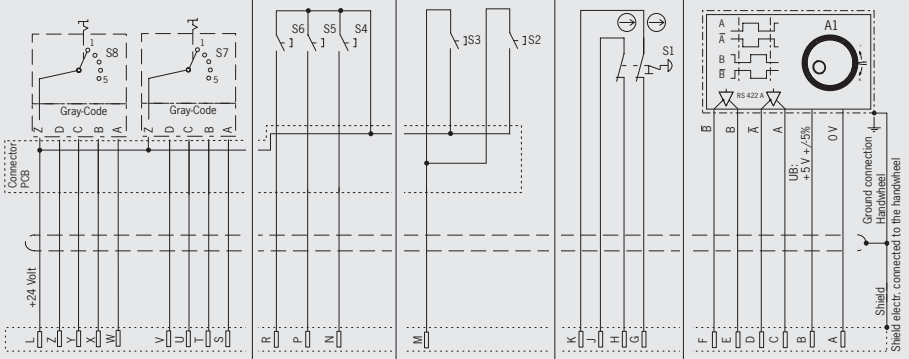

* Travel diagram
see page 6

Hand-held pendant stations HBA

- **Handwheel 100 pulses, wear-free magnetic detent mechanism**
- **1 enabling switch, 3-stage, 2 NO contacts each**

Depending on version:
- **Tamper-proof emergency stop device according to EN ISO 13850, dual-channel**
- **1 selector switch with 6 positions (X, Y, Z, 4, 5, 6)**
- **1 selector switch with 5 positions (0, 1, 10, 100, 1000)**
- **3 foil pushbuttons, 1 NO contact each**

Notes
- Holder HBA for hand-held pendant stations: see accessories page 58
- Associated flange connector, 23-pin: see accessories page 51
- Associated flange connector, 28-pin: see accessories page 51

Dimension drawing

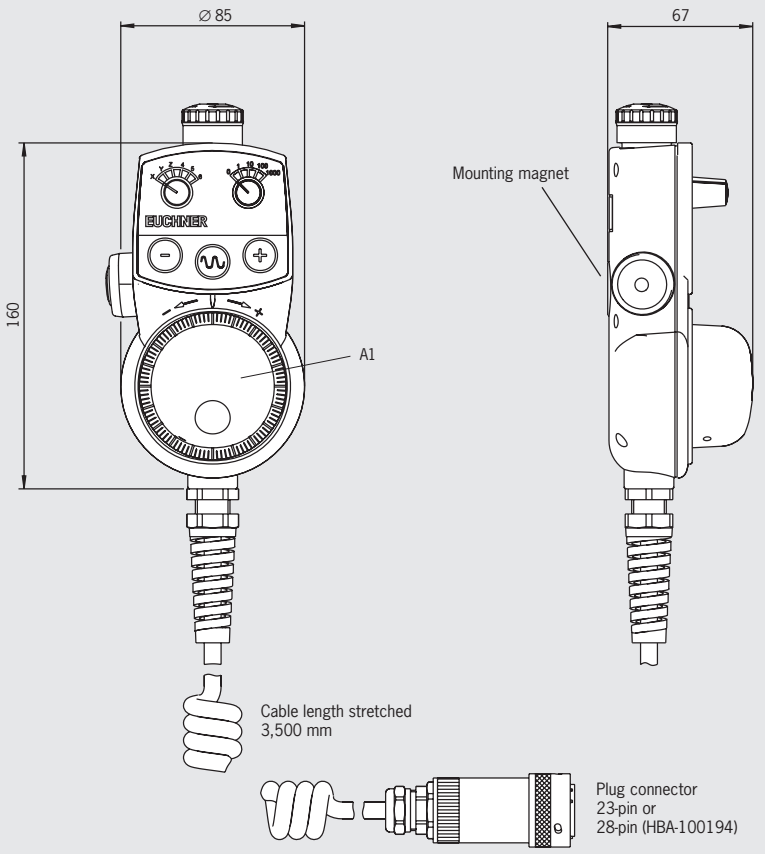

Technical data

Parameter	Value	Unit
HBA housing		
Material	Plastic	
Color	Gray RAL 7040	
Operating temperature	0 ... +50	°C
Storage temperature	-20 ... +50	°C
Degree of protection according to EN 60529 / NEMA	IP 65 / 250-12	
Connection	Spiral cable, stretchable to 3.5 m, plug connector 23-pin or 28-pin (HBA - 100 194)	
Weight	Approx. 0.8	kg
Handwheel		
Pulses/revolution	100	
Power supply	5 ± 5%	V DC
Output specifications	RS422A	
Enabling switch ZXE, 3-stage		
Switching elements	2 NO contacts	
Utilization category according to IEC 60947-5-1	DC-13, U_e 24 V, I_e 0.1 A	
Emergency stop device		
Standard	EN ISO 13850	
Switching elements	2 NC contacts	
Utilization category according to IEC 60947-5-1	DC-13, U_e 24 V, I_e 3 A	
Selector switch		
Output code	see circuit plan	
Switching voltage max.	25	V AC/DC
Breaking capacity max.	0.2	VA
Membrane keypad		
Switching elements	3, one NO contact each	
Switching voltage max.	30	V DC
Switching current max.	100	mA
Breaking capacity max.	1	W

Ordering table

Version/item	Features					Order no.
	2 selector switches, 5 and 6 positions	3 foil push-buttons, 1 NO contact each	1 enabling switch ZXE, 3-stage	Emergency stop device	Handwheel 100 pulses	
HBA-100186 			●		●	**100186**
HBA-100212 	●		●	●	●	**100212**
HBA-100213 		●	●	●	●	**100213**
HBA-100194 	●	●	●	●	●	**100194**

Circuit plan

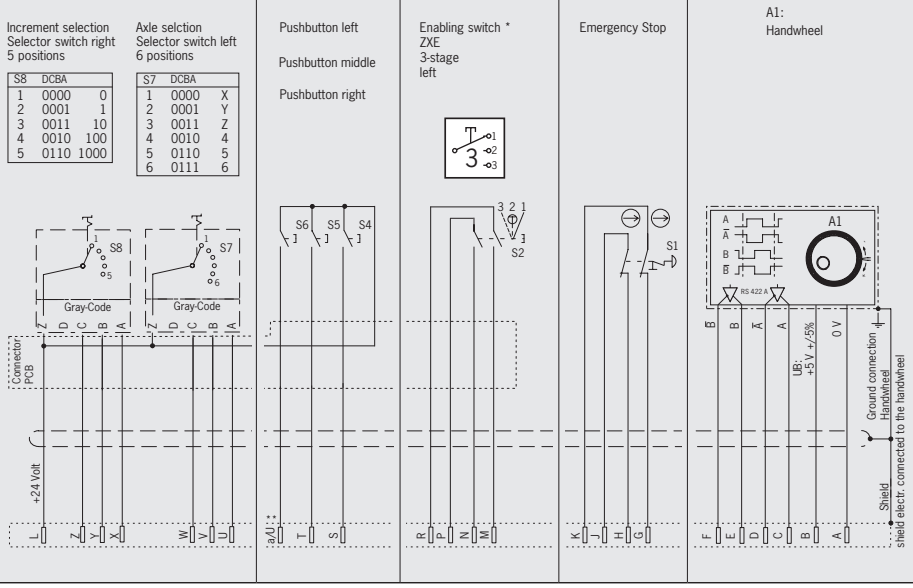

* Travel diagram see page 6
** Plug contact U on HBA-100213 (plug connector, 23-pin)
Plug contact a on HBA-100194 (plug connector, 28-pin)

Hand-held pendant stations HBA

- **Handwheel 100 pulses, wear-free magnetic detent mechanism**
- **Tamper-proof emergency stop device according to EN ISO 13850, dual-channel**
- **1 selector switch, 6 positions (0, Z, X, Y, 4, 5)**
- **6 foil pushbuttons, 1 NO contact each**

Depending on version:
- **2 pushbuttons, 2-stage, 1 NO contact each, e.g. for enabling function**
- **1 enabling switch, 3-stage, 2 NO contacts**

Notes
- Holder HBA for hand-held pendant stations: see accessories page 58
- Associated connection kit comprising 26-pin connection box and short-circuit plug: see accessories page 45
- Function compatible with Siemens MINI BHG

Dimension drawing

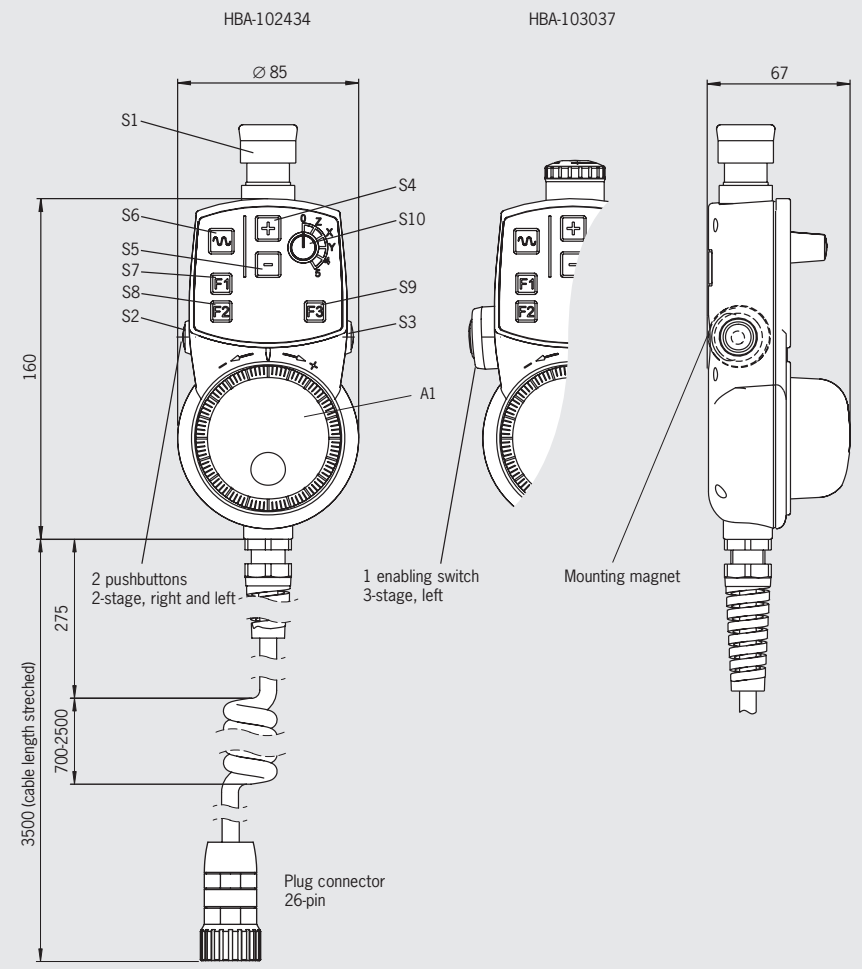

Technical data

Parameter	Value	Unit
HBA housing		
Material	Plastic	
Color	Gray RAL 7040	
Operating temperature	0 ... +50	°C
Storage temperature	-20 ... +50	°C
Degree of protection according to EN 60529 / NEMA	IP 65 / 250-12	
Connection	Coiled cable, stretchable to 3.5 m, 26-pin plug connector	
Weight	Approx. 0.8	kg
Handwheel		
Pulses/revolution	100	
Power supply	5 ± 5%	V DC
Output specifications	RS422A	
Emergency stop device		
Standard	EN ISO 13850	
Switching elements	2 NC contacts	
Utilization category according to IEC 60947-5-1	DC-13, U_e 24 V, I_e 3 A	
Selector switch		
Output code	see circuit plan	
Switching voltage max.	25	V AC/ DC
Breaking capacity max.	0.2	VA
Membrane keypad		
Switching elements	6, one NO contact each	V AC/DC
Switching voltage max.	30	V DC
Switching current max.	100	mA
Breaking capacity max.	1	W
Pushbutton, 2-stage, e.g. for enabling function		
Switching elements	2, one NO contact each	mA
Connection ratings	30 V DC / 100 mA	W
Enabling switch ZXE, 3-stage		
Switching elements	1, 2 NO contacts	
Utilization category according to IEC 60947-5-1	DC-13, U_e 24 V, I_e 0.1 A	

Ordering table

Version/item	Features						Order no.
	1 selector switch 6 positions S10	6 foil pushbuttons, 1 NO contact each S4, S5, S6, S7, S8, S9	2 pushbuttons, 2-stage S2, S3	1 enabling switch ZXE, 3-stage S2	Emergency stop device S1	Handwheel 100 pulses A1	
HBA-102434 	●	●	●		●	●	**102434**
HBA-103037 	●	●		●	●	●	**103037**

Circuit plan

S10:
Selector switch right
6 positions

S10	CBA	
1	011	0
2	010	Z
3	110	X
4	111	Y
5	101	4
6	100	5

S4: Push button "+"
S5: Push button "-"
S6: Push button "~"
S7: Push button "F1"
S8: Push button "F2"
S9: Push button "F3"

S2 (left) + S3 (right):
Pushbutton 2-stage
e.g. for
enabling function

S2:
Enabling switch
ZXE
3 stage
left

S1:
Emergency-stop

Handwheel
RS422

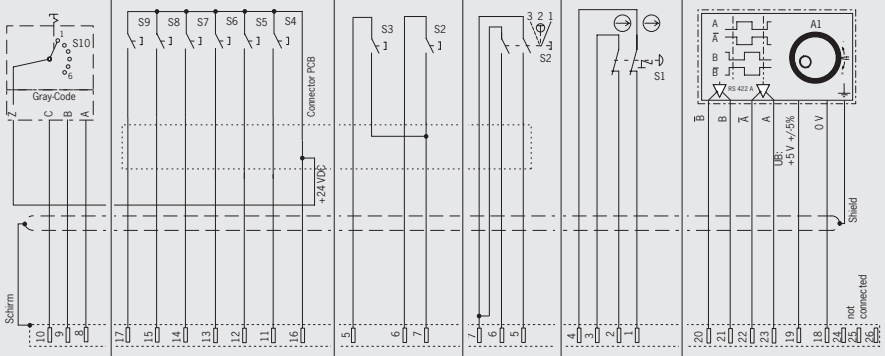

* Travel diagram
see page 6

Hand-held pendant stations HBA

- **Membrane keypad can be labeled as required using slide-in strips**
- **Tamper-proof emergency stop device according to EN ISO 13850, dual-channel**
- **LEDs white, color customer-specific using colored keypad membrane**

Depending on version:
- **2 pushbuttons, 2-stage, 1 NO contact each, e.g. for enabling function**
- **1 enabling switch, 3-stage, 2 NO contacts**
- **Coiled cable, stretchable to 5 m, 35-pin plug connector**
- **Coiled cable, stretchable to 3.5 m, 42-core, flying lead**

Notes
- Holder HBA for hand-held pendant stations: see accessories page 58
- Associated flange connector, 35-pin: see connection components page 51
- For template for slide-in strips, see www.euchner.de (Support)

Dimension drawing

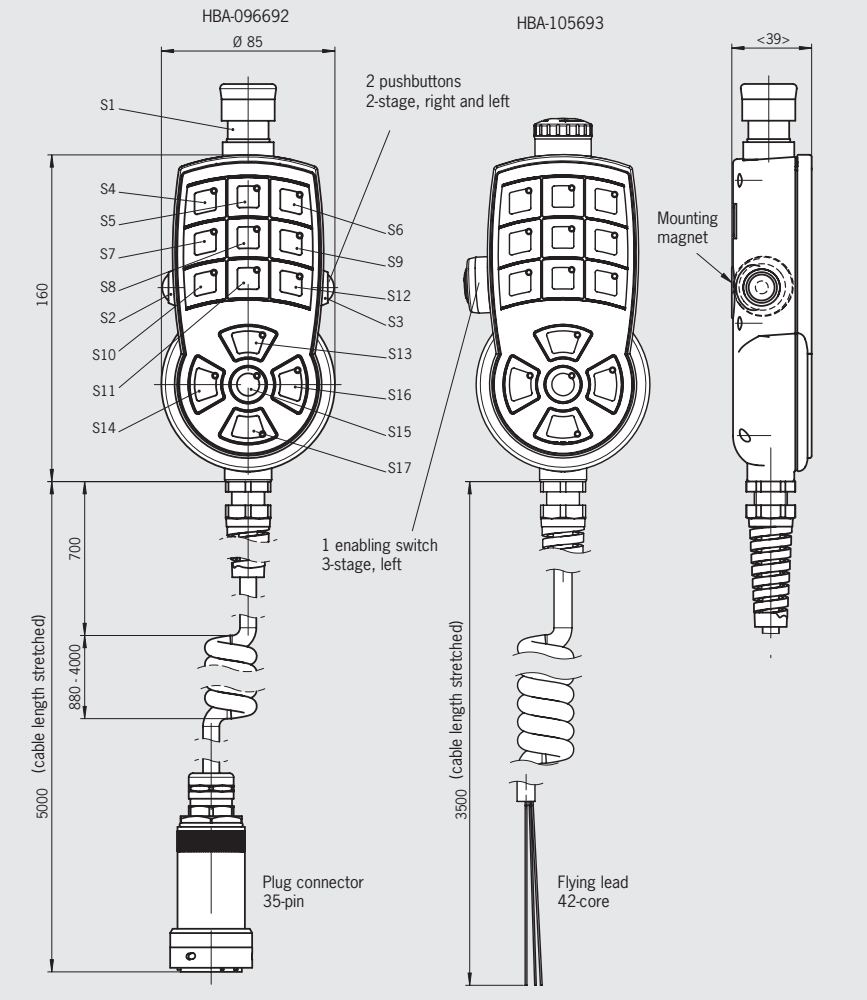

Technical data

Parameter	Value	Unit
HBA housing		
Material	Plastic	
Color	Gray RAL 7040	
Operating temperature	0 ... +50	°C
Storage temperature	-20 ... +50	°C
Degree of protection according to EN 60529 / NEMA	IP 65 / 250-12	
Connection	Coiled cable, stretchable to 5 m, 35-pin plug connector Coiled cable, stretchable to 3.5 m, 42-core, flying lead	kg
Weight	Approx. 0.8	kg
Emergency stop device		
Standard	EN ISO 13850	V DC
Switching elements	2 NC contacts	
Utilization category according to IEC 60947-5-1	DC-13, U_e 24 V, I_e 3 A	
Membrane keypad		
Switching elements	14, one NO contact each	
Switching voltage max.	30	V DC
Switching current max.	100	mA
Breaking capacity max.	1	W
Pushbutton, 2-stage, e.g. for enabling function		
Switching elements	2, one NO contact each	
Switching voltage max.	30	V DC
Switching current max.	100	mA
Enabling switch ZXE, 3-stage		
Switching elements	1, 2 NO contacts	
Utilization category according to IEC 60947-5-1	DC-13, U_e 24 V, I_e 0.1 A	

Ordering table

Version/item	Features				Order no.
	Membrane keypad S4 - S17	Pushbutton, 2-stage S2, S3	Enabling switch ZXE, 3-stage S2	Emergency stop device S1	
HBA-096692 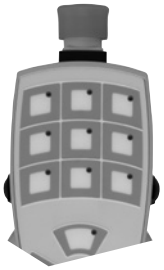	●	●		●	**096692**
HBA-105693 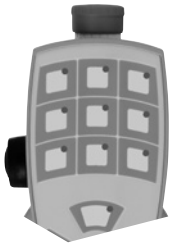	●		●	●	**105693**
Circuit plan	S4 - S17: Membrane keypad	S2: Enabling switch* 2-stage left S3: Enabling switch* 2-stage right	S2: Enabling switch* ZXE 3-stage left	S1: Emergency Stop	

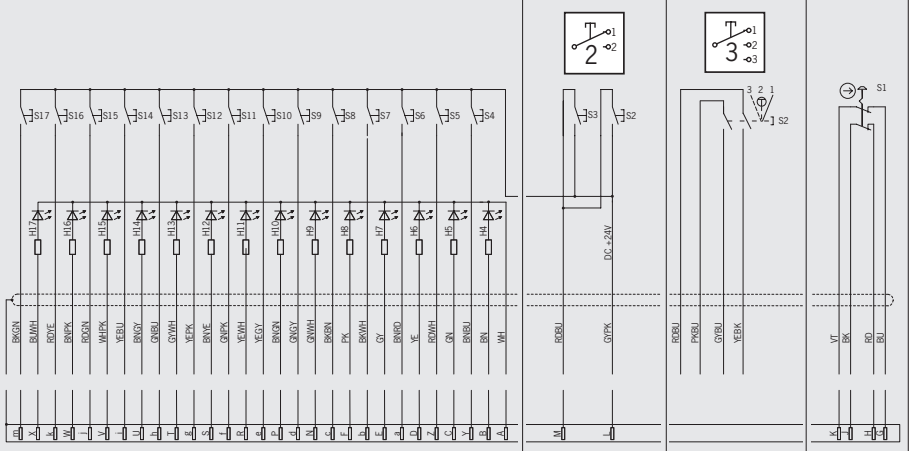

* Travel diagram see page 6

Hand-held pendant stations HBAS

- **Programmable pulse generator**
- **Tamper-proof emergency stop device according to EN ISO 13850, dual-channel**
- **Membrane keypad with 20 keys and 2 LEDs**
- **LCD display with LED background lighting, switchable 4-line/8-column or 8-line/16-column**
- **RS422 interface, 3964R protocol**

Depending on version:
- **2 pushbuttons, 2-stage, 1 NO contact each, e.g. for enabling function**
- **1 enabling switch, 3-stage, 2 NO contacts**
- **Coiled cable stretchable to 3.5 m**
- **Straight connection cable, length 10 m**

Notes
- Holder HBA for hand-held pendant stations: see accessories page 58
- Associated male flange connector, 19-pin: see accessories page 45
- ActiveX module available for integrating the user's applications (for MS Windows®-based user programs with ActiveX support)

Dimension drawing

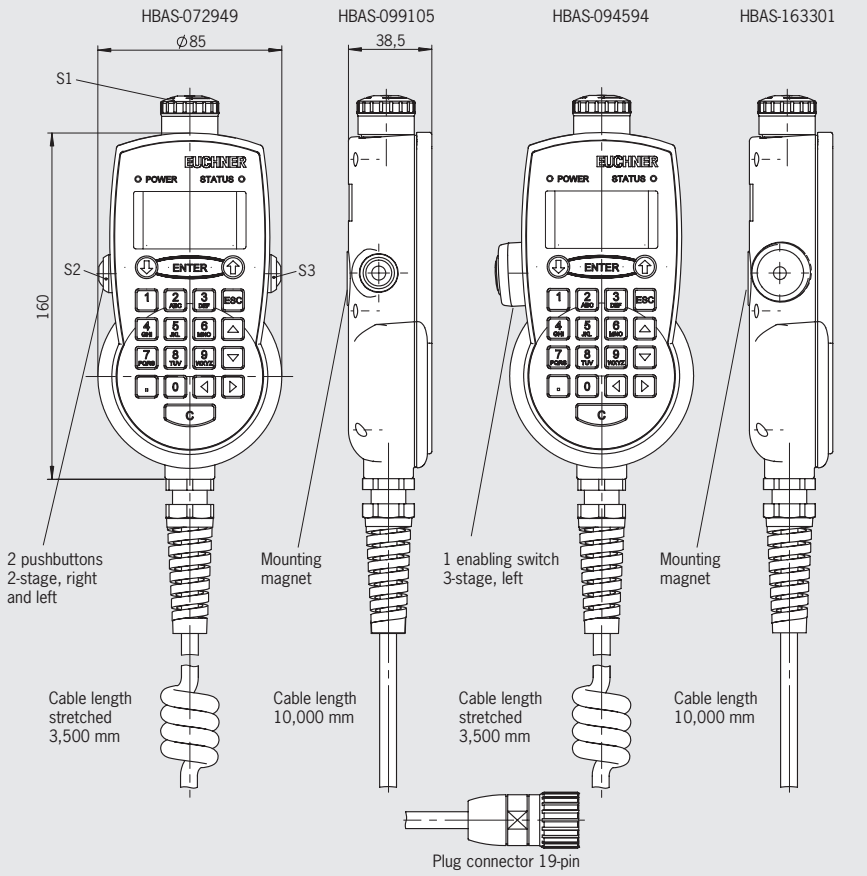

Technical data

Parameter	Value	Unit
HBA housing		
Material	Plastic	
Color	Gray RAL 7040	
Operating temperature	0 ... +50	°C
Storage temperature	-20 ... +50	°C
Degree of protection according to EN 60529 / NEMA	IP 65 / 250-12	
Connection	Spiral cable, stretchable to 3.5 m, or straight connection cable, length 10 m. Plug connector, 19-pin	
Weight	Approx. 0.85	kg
Pulse generator		
Pulses	programmable	
Output specifications	RS422A	
Emergency stop device		
Standard	EN ISO 13850	
Switching elements	2 NC contacts	
Utilization category according to IEC 60947-5-1	DC-13, U_e 24 V, I_e 3 A	A
Communications interface		
Type	Serial, RS422A (4-wire)	
Data format	8 data bits + 1 parity bit (even), 1 stop bit	
Transfer speed	9600 or 19200 baud, automatic detection	
Transfer protocol	3964R	
Electrical connection		
Power supply	24 ± 20%	V DC
Operating current, max.	100	mA
Pushbutton, 2-stage, e.g. for enabling function		
Switching elements	2, one NO contact each	
Switching voltage max.	30	V DC
Switching current max.	100	mA
Enabling switch ZXE, 3-stage		
Switching elements	1, 2 NO contacts	
Utilization category according to IEC 60947-5-1	DC-13, U_e 24 V, I_e 0.1 A	

Ordering table

Version/item	Features: 2 pushbuttons, 2-stage S2, S3	Features: 1 enabling switch ZXE, 3-stage S2	Features: Emergency stop device S1	Features: Programmable pulse generator, membrane keypad, display, RS422 interface, 3964R protocol	Order no.
HBAS-072949 HBAS-099105 	●		●	●	**072949** **099105**
HBAS-094594 HBAS-163301 		●	●	●	**094594** **163301**
Circuit plan * Travel diagram see page 6	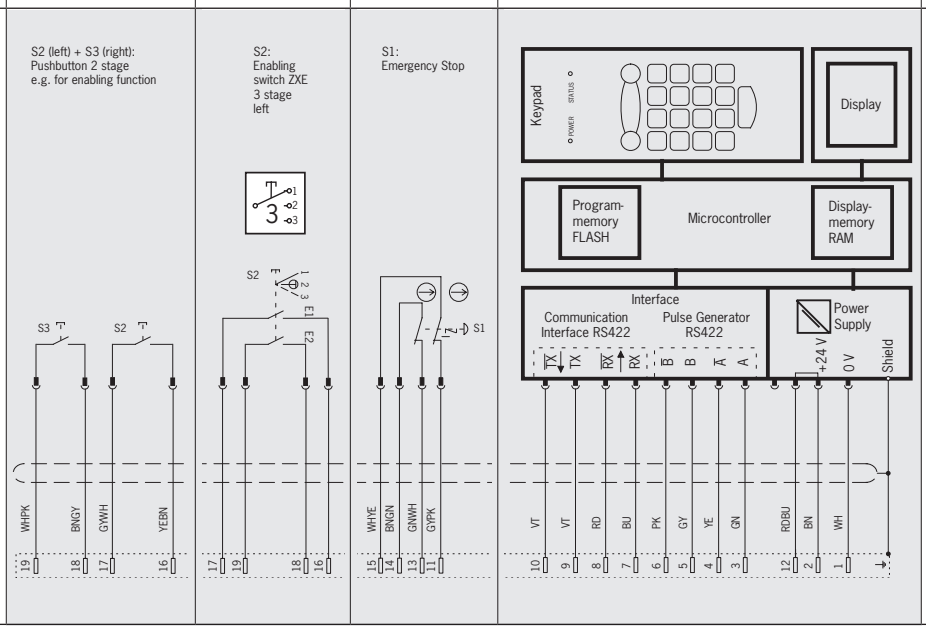				

ActiveX module Software for integration into user software that supports ActiveX	**093011**
ActiveX module manual Detailed documentation on use of the software	**093013**

Hand-held pendant station HBM-111711

- **Handwheel 100 pulses, wear-free magnetic detent mechanism**
- **Tamper-proof emergency stop device according to EN ISO 13850, dual-channel**
- **1 enabling switch, 3-stage, 2 NO contacts**
- **2 selector switches, 6 positions each (X, Y, Z, 4, 5, 6 and 0, 0.1, 1, 10, 100, 1000)**
- **6 illuminated pushbuttons, can be individually labeled**
- **Coiled cable, stretchable to 3.5 m, 35-core, flying lead**

Dimension drawing

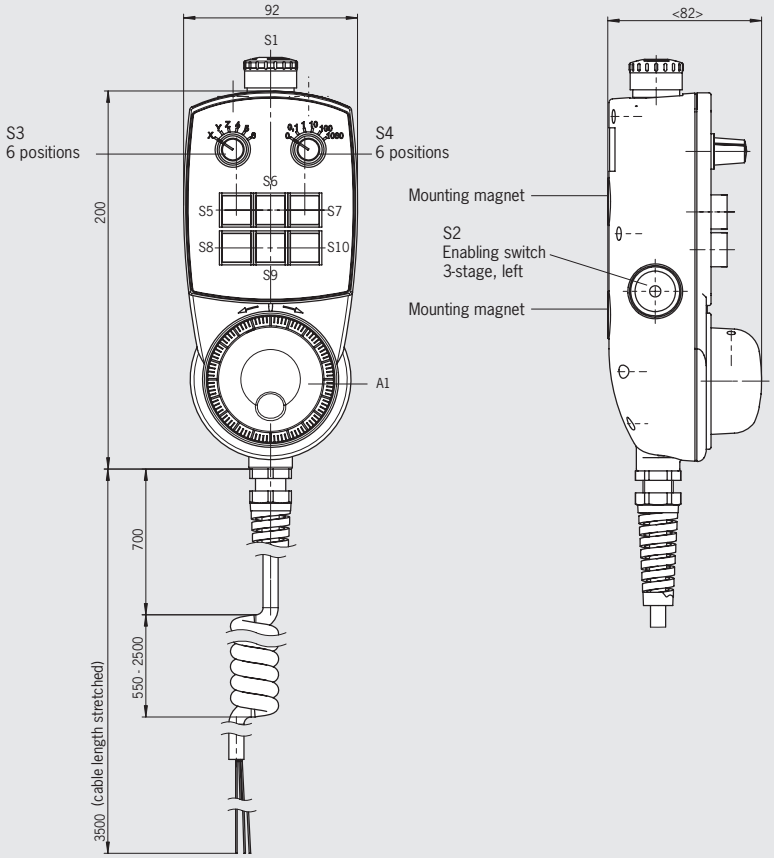

Notes

- Holder HBM for hand-held pendant stations: see accessories page 58

Technical data

Parameter	Value	Unit
HBM housing		
Material	Plastic	
Color	Anthracite	
Operating temperature	0 ... +50	°C
Storage temperature	-20 ... +50	°C
Degree of protection according to EN 60529 / NEMA	IP 65 / 250-12	
Connection	Coiled cable, stretchable to 3.5 m, 35-core, flying lead	
Weight	Approx. 1.1	kg
Handwheel		
Pulses/revolution	100	
Power supply	5 ± 5%	V DC
Output specifications	RS422A	
Emergency stop device		
Standard	EN ISO 13850	
Switching elements	2 NC contacts	
Utilization category according to IEC 60947-5-1	DC-13, U_e 24 V, I_e 3 A	A
Enabling switch ZXE, 3-stage		
Switching elements	1, 2 NO contacts	
Utilization category according to IEC 60947-5-1	DC-13, U_e 24 V, I_e 0.1 A	
Selector switch		
Output code	see circuit plan	
Switching voltage max.	25	V AC/DC
Breaking capacity max.	0.2	VA
Buttons		
Switching elements	3, one NO contact each	
Switching voltage max.	30	V DC
Switching current max.	100	mA
LED	I = 21 mA / U = 24 V DC	

Ordering table

Item	Order no.
Hand-held pendant station HBM-111711 with: ▶ Handwheel 100 pulses ▶ Tamper-proof emergency stop device according to EN ISO 13850, dual-channel ▶ Enabling switch ZXE, 3-stage, 2 NO contacts, ▶ 2 selector switches, 6 positions each ▶ 6 illuminated pushbuttons, 1 NO contact each	**111711**

Circuit plan

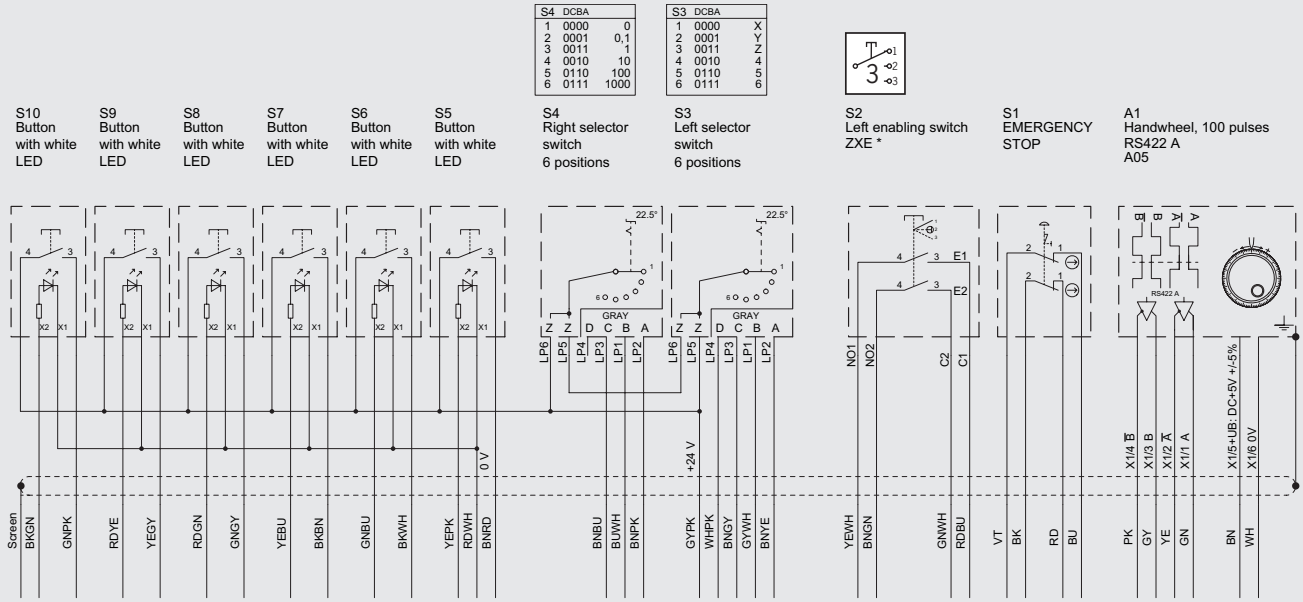

* Travel diagram see page 6

Hand-held pendant station HBM-112392

- **Handwheel 100 pulses, wear-free magnetic detent mechanism**
- **Tamper-proof emergency stop device according to EN ISO 13850, dual-channel**
- **1 enabling switch, 3-stage, 2 NO contacts**
- **9 illuminated foil pushbuttons, 1 NO contact each, can be labeled as required using slide-in strips**
- **Straight connection cable, length 3.5 m, plug connector 35-pin**

Dimension drawing

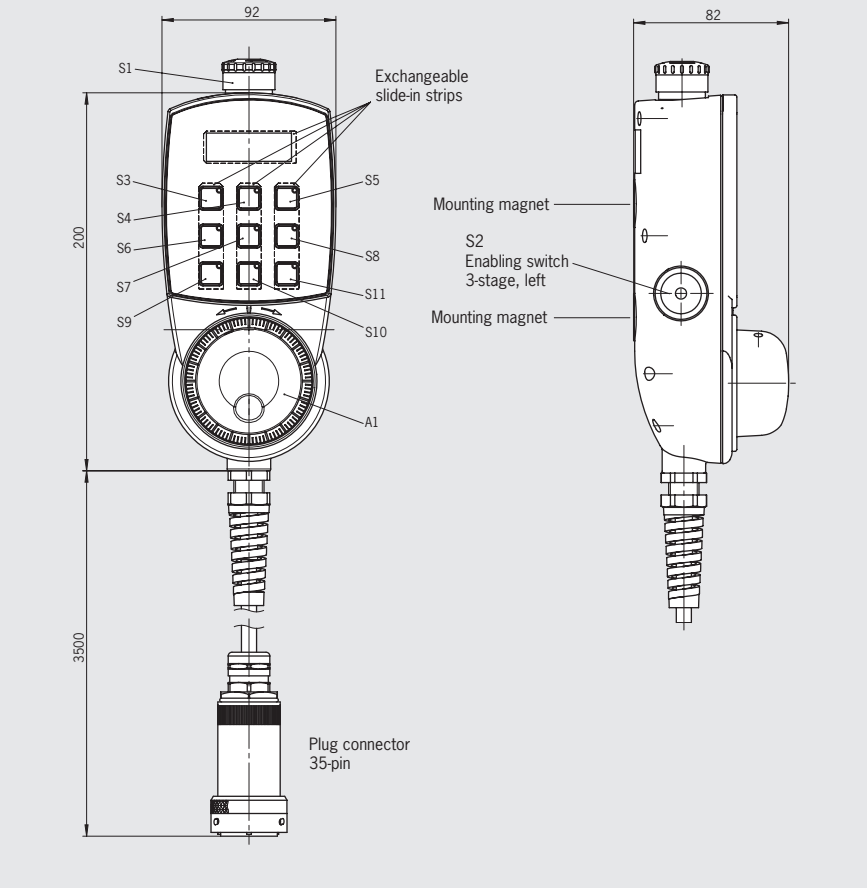

Notes

- Holder HBM for hand-held pendant stations: see accessories page 58
- Associated flange connector, 35-pin: see connection components page 51
- For template for slide-in strips, see www.euchner.de (Support)
- Replacement for hand-held pendant stations HBE-097337 and HBE-097338

Technical data

Parameter	Value	Unit
HBM housing		
Material	Plastic	
Color	Anthracite	
Operating temperature	0 ... +50	°C
Storage temperature	-20 ... +50	°C
Degree of protection according to EN 60529 / NEMA	IP 65 / 250-12	
Connection	Straight connection cable, length 3.5 m, plug connector 35-pin	
Weight	Approx. 1.1	kg
Handwheel		
Pulses/revolution	100	
Power supply	5 ± 5%	V DC
Output specifications	RS422A	
Emergency stop device		
Standard	EN ISO 13850	
Switching elements	2 NC contacts	
Utilization category according to IEC 60947-5-1	DC-13, U_e 24 V, I_e 3 A	A
Enabling switch ZXE, 3-stage		
Switching elements	1, 2 NO contacts	
Utilization category according to IEC 60947-5-1	DC-13, U_e 24 V, I_e 0.1 A	
Membrane keypad		
Switching elements	14, one NO contact each	
Switching voltage max.	30	V DC
Switching current max.	100	mA
Breaking capacity max.	1	W

Ordering table

Item	Order no.
Hand-held pendant station HBM-112392 with: ▶ Handwheel 100 pulses ▶ Tamper-proof emergency stop device according to EN ISO 13850, dual-channel ▶ Enabling switch ZXE, 3-stage, 2 NO contacts, ▶ 9 illuminated foil pushbuttons, 1 NO contact each ▶ Slide-in strips for logo	**112392**

Circuit plan

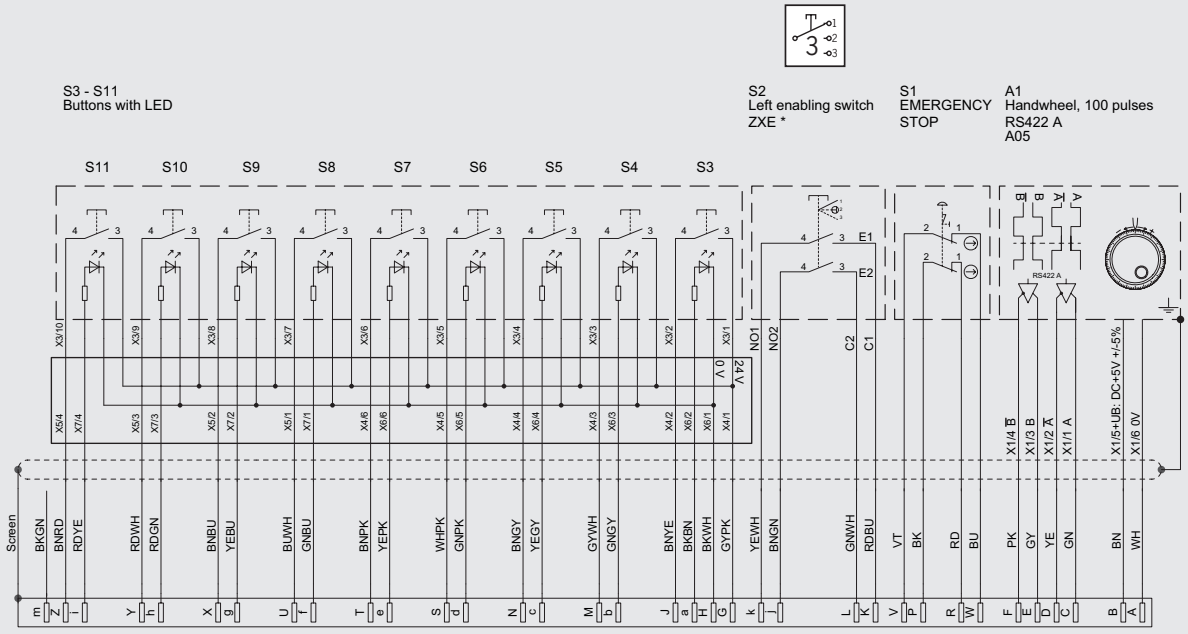

* Travel diagram
see page 6

Hand-held pendant station HBL-097339

- **Handwheel 100 pulses**
- **Tamper-proof emergency stop device according to EN ISO 13850, dual-channel**
- **Enabling switch, 3-stage**
- **3 illuminated pushbuttons, can be individually labeled**
- **2 selector switches**
- **Key-operated rotary switch**

Dimension drawing

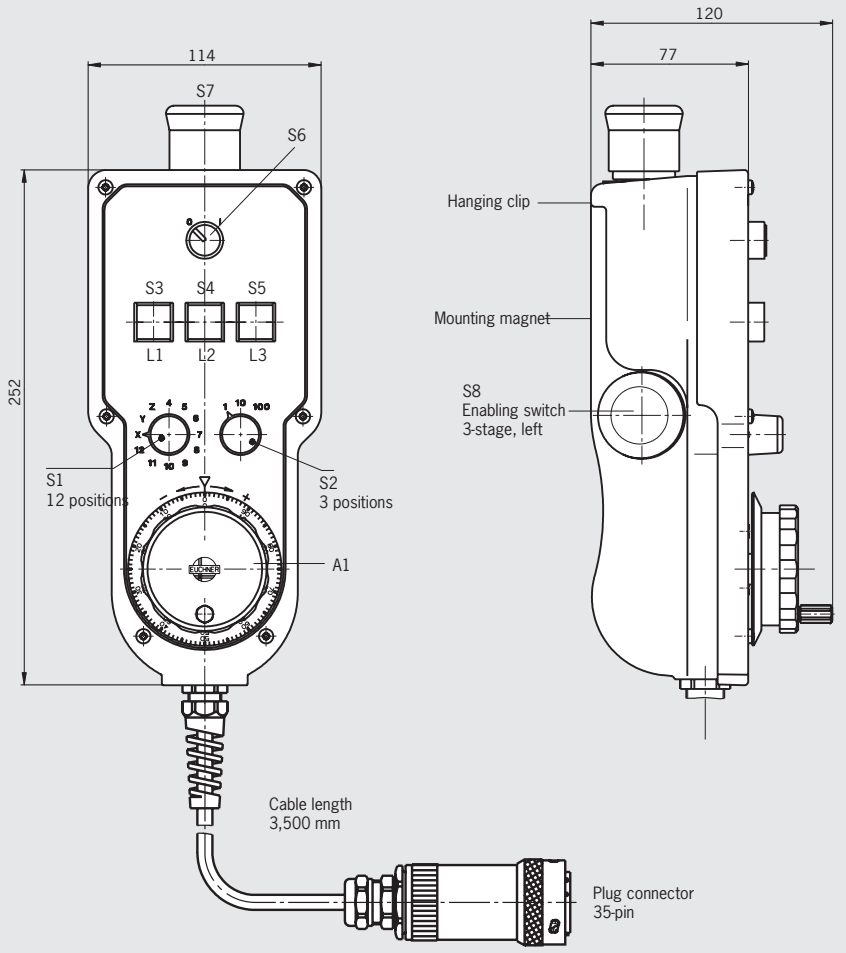

Notes

- Holder HBL for hand-held pendant stations: see accessories page 58
- Associated flange connector, 35-pin: see connection components page 51

Technical data

Parameter	Value	Unit
Housing HBL		
Material	Plastic	
Color	Blue-gray RAL 7031	
Ambient temperature	0 ... +55	°C
Degree of protection according to EN 60529	IP 65	
Connection	Cable 3.5 m, 35-pin plug	
Weight	Approx. 2.1	kg
Emergency stop device		
Standard	EN ISO 13850	
Switching elements	2 NC contacts	
Utilization category according to IEC 60947-5-1	DC-13 U_e 24 V I_e 2,75 A	
Handwheel HKD		
Pulses per revolution	100	
Power supply	5 ± 5%	V DC
Output circuit	RS 422 A	
Output signals	see page 67	
Enabling switch ZSE, 3-stage		
Switching elements	2 NO contacts, 1 positively driven contact	
Utilization category according to IEC 60947-5-1	AC-15 U_e 24 V I_e 4 A DC-13 U_e 24 V I_e 3 A	
Buttons		
Switching elements	3, one NO contact each	
Switching voltage max.	30	V DC
Switching current max.	100	mA
LED	I = 21 mA / U = 24 V DC	
Selector switch		
Switching voltage max.	30	V DC
Switching current max.	100	mA
Key-operated rotary switch		
Switching voltage max.	30	V AC/DC
Switching current max.	250	mA

Ordering table

Item	Order no.
Hand-held pendant station HBL-097339 with: ▶ Handwheel 100 pulses ▶ Tamper-proof emergency stop device according to EN ISO 13850, dual-channel ▶ Enabling switch ZSE, 3-stage, 2 NO contacts, 1 positively driven contact ▶ 3 illuminated pushbuttons, 1 NO contact each ▶ 2 selector switches, 12 positions and 3 positions ▶ Key-operated rotary switch, 1 NO contact, 1 NC contact	**097339**

Circuit plan

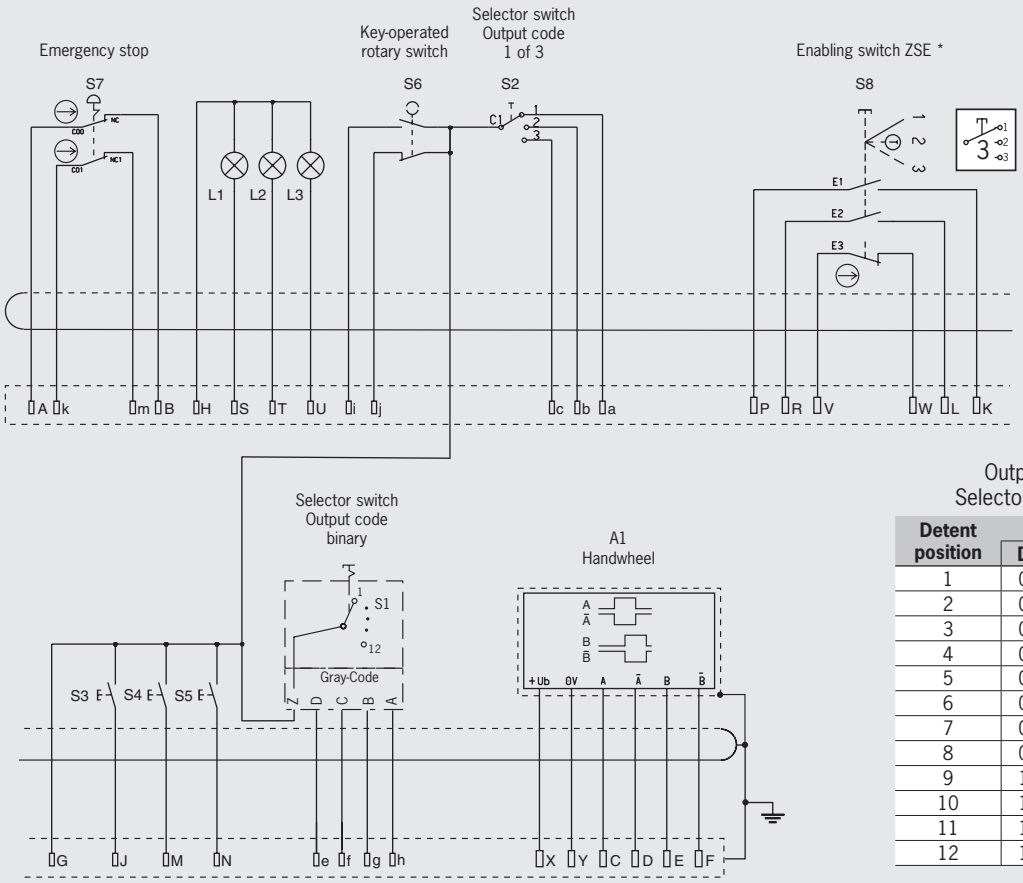

Output table
Selector switch S1

Detent position	Output			
	D	C	B	A
1	0	0	0	0
2	0	0	0	1
3	0	0	1	0
4	0	0	1	1
5	0	1	0	0
6	0	1	0	1
7	0	1	1	0
8	0	1	1	1
9	1	0	0	0
10	1	0	0	1
11	1	0	1	0
12	1	0	1	1

* Travel diagram
see page 6

Hand-held pendant station HBLS-072725

- **Handwheel 100 pulses**
- **Tamper-proof emergency stop device according to EN ISO 13850, dual-channel**
- **2 pushbuttons, 2-stage, e.g. for enabling function**
- **Keypad with 12 illuminated keys**
- **Keypad can be designed as required using slide-in film**
- **2 selector switches**
- **LCD display (text mode)**
- **RS422 interface, 3964R protocol**

Dimension drawing

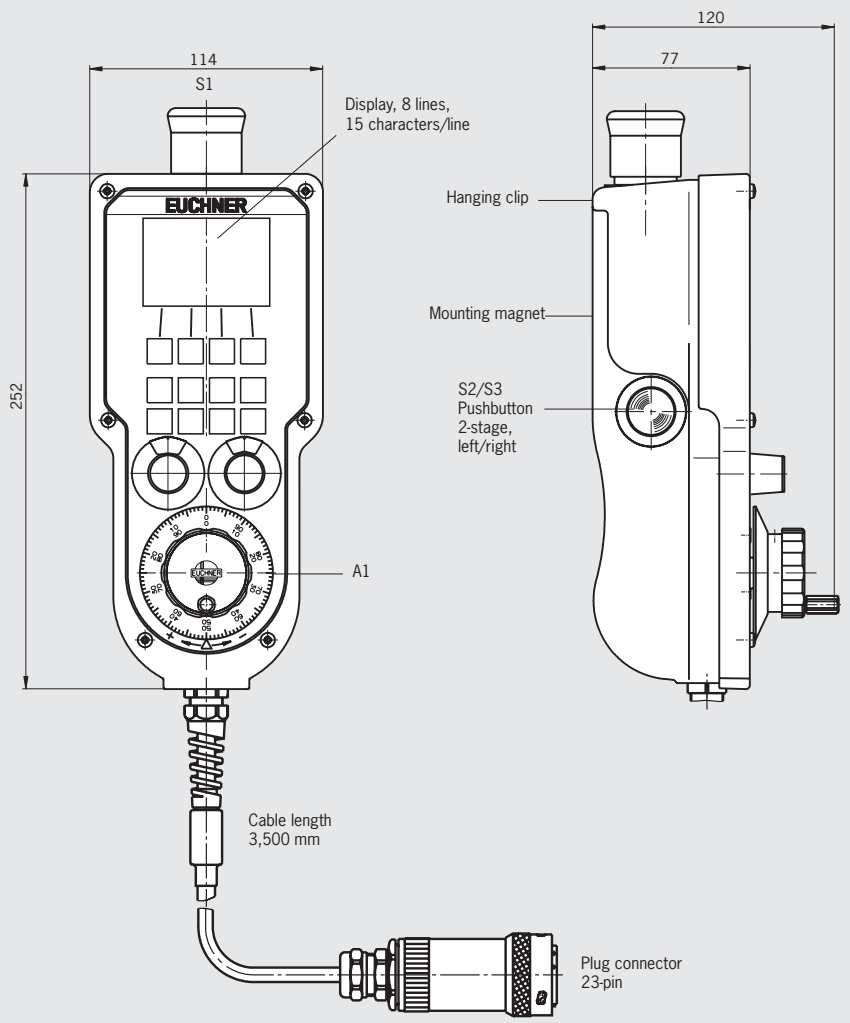

Notes

- Holder HBL for hand-held pendant stations: see accessories page 58
- Associated flange connector, 23-pin: see connection components page 51
- ActiveX module available for integrating the user's applications (for MS Windows®-based user programs with ActiveX support)

Technical data

Parameter	Value	Unit
Housing HBL		
Material	Plastic	
Color	Blue-gray RAL 7031	
Operating temperature	0 ... +50	°C
Degree of protection according to EN 60529	IP 65	
Connection	Cable 3.5 m, 23-pin plug	
Weight	2.2	kg
Emergency stop device		
Standard	EN ISO 13850	
Switching elements	2 NC contacts	
Utilization category according to IEC 60947-5-1	DC-13 U_e 24 V I_e 2.75 A	
Handwheel HKD		
Pulses per revolution	100	
Output circuit	RS 422 A	
Output signals	see page 67	
Pushbutton ZSG, 2-stage, e.g. for enabling function		
Switching elements	2, one NO contact each	
Utilization category according to IEC 60947-5-1	AC-15 U_e 24 V I_e 4 A DC-13 U_e 24 V I_e 3 A	
Interface		
Type	RS 422	
Data format	8 data bits , even parity, 1 or 2 stop bits	
Transfer speed	9600 or 19200 (setting using DIL switches)	baud
Transfer protocol	3964 R	
Electrical connection		
Power supply	24 ±20%	V DC
Operating current, max.	200	mA

Ordering table

Item	Order no.
Hand-held pendant station HBLS-072725 with: ▶ Handwheel 100 pulses ▶ Tamper-proof emergency stop device according to EN ISO 13850, dual-channel ▶ 2 pushbuttons ZSG 2-stage, 2 NO contacts each, e.g. for enabling function ▶ Keypad with 12 illuminated keys ▶ 2 selector switches, 12 positions each	**072725**

Circuit plan

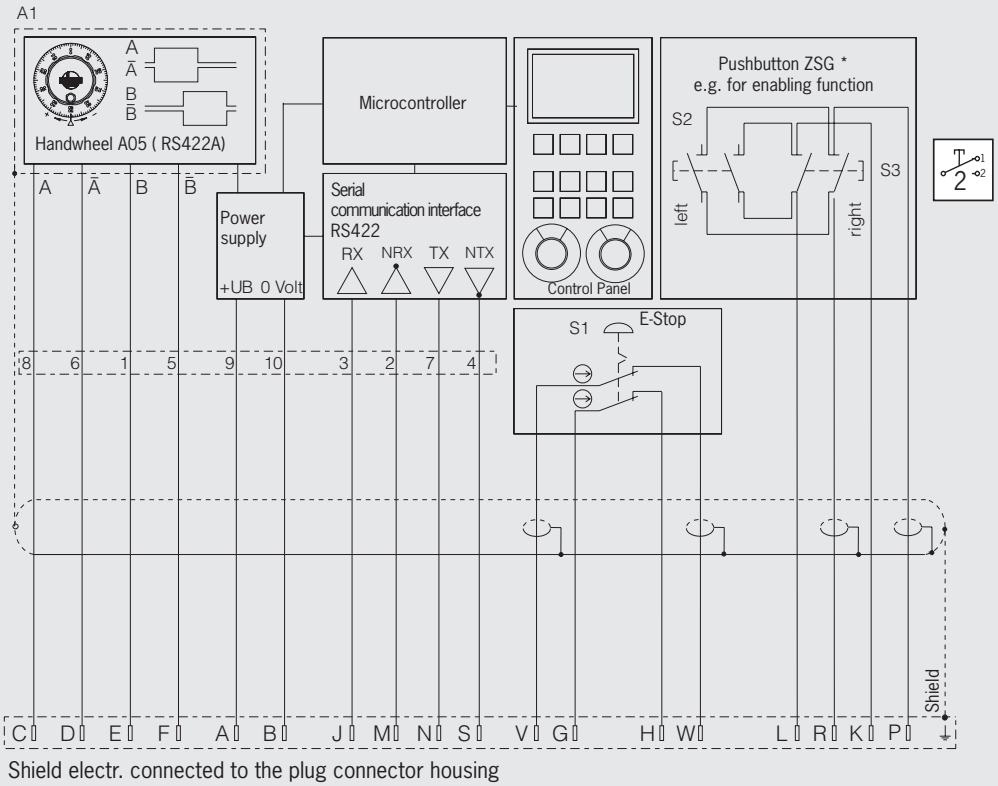

Shield electr. connected to the plug connector housing

* Travel diagram
see page 6

ActiveX module Software for integration into user software that supports ActiveX	**067176**
ActiveX module manual Detailed documentation on use of the software	**067178**

Hand-held pendant station HBA kit

The kit is designed to match individual customer specifications. Thanks to its modular configuration, you can construct prototypes and special versions in line with your requirements. To match the housings, aluminum front panels are available in silver or black anodized.

Customer-specific functionality can be achieved by using the components supplied in the kit (pushbutton, selector switch, key-operated rotary switch, handwheel, enabling switch, etc). For connection to the control system, cables with different numbers of wires, plug connectors and the relevant flange sockets are available. The type of protection IP 65 can be achieved using one of the seals included.

HBA kit without handwheel

The versions without handwheel have a cable gland and mounting magnet. In addition to the basic HBA housing, other identical versions with the option of fitting an emergency stop device and 2-stage push-buttons or 3-stage enabling switches are available.

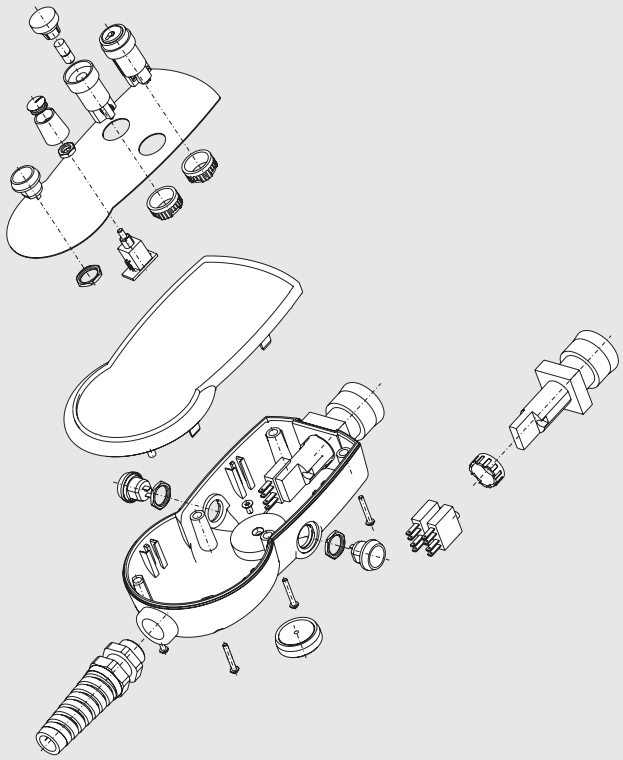

HBA kit with handwheel

The versions with handwheels, some with 2-stage pushbutton or 3-stage enabling switch, are distinguished by the output stages of the handwheels and are adapted to various control systems.

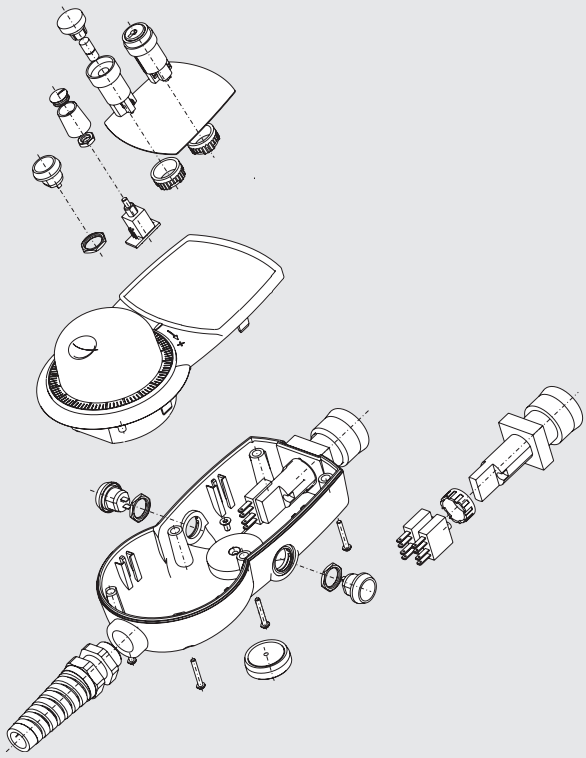

HBA housing without handwheel

- **Cable gland for cable diameter 5-10 mm**
- **Rubber-coated mounting magnet on the rear of housing**
- **6 fixing domes for printed circuit board installation in top shell**

Depending on version:
- **Hole for emergency stop device** (sealed with blind plug)
- **2 pushbuttons, 2-stage, 1 NO contact each, e.g. for enabling function**
- **1 enabling switch, 3-stage, 2 NO contacts**

Notes
- Suitable front panels see page 36
- Suitable emergency stop device (turn or pull to reset) see page 54
- **Attention:** Housing HBA-095562 is suitable only for emergency stop device 106435 with short design.
- Depending on version with 2 2-stage pushbuttons or 1 3-stage enabling switch.

Dimension drawing

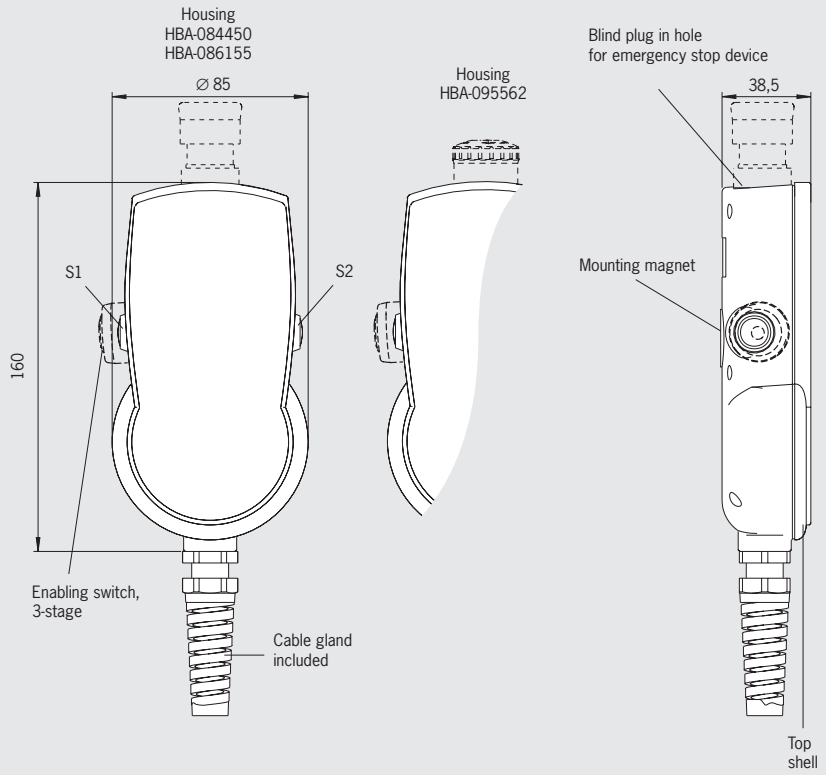

Dimensions of emergency stop devices see page 54

Technical data

Parameter	Value	Unit
HBA housing		
Material	Plastic	
Color	Gray RAL 7040	
Operating temperature	0 ... +50	°C
Storage temperature	-20 ... +50	°C
Degree of protection according to EN 60529 / NEMA	IP 65 / 250-12	
Weight	0.3	kg
Pushbutton, 2-stage, e.g. for enabling function		
Switching elements	2, one NO contact each	
Connection ratings	DC 30 V / 100 mA	
Enabling switch ZXE, 3-stage		
Switching elements	2 NO contacts	
Utilization category according to IEC 60947-5-1	DC-13, U_e 24 V, I_e 0.1 A	

Ordering table

Version/item	Features			Order no.
	Hole for emergency stop device	2 pushbuttons * 2-stage, pre-assembled with 1 NO contact each, e.g. for enabling function S1, S2	1 enabling switch ZXE ** 3-stage, 2 NO contacts pre-assembled S1	
Housing HBA-084445 (without hole, without enabling switch)				**084445**
Housing HBA-084450	● for emergency stop short and long designs			**084450**
Housing HBA-086155	● for emergency stop short and long designs	●		**086155**
Housing HBA-095562	● for emergency stop short design		●	**095562**
				

* Travel diagram see page 6

** Travel diagram see page 55

HBA housing with handwheel

- **Handwheel 100 or 25 pulses, wear-free magnetic detent mechanism**
- **Hole for emergency stop device** (sealed with blind plug)
- **Cable gland for cable diameter 5-10 mm**
- **Rubber-coated mounting magnet on the rear of housing**
- **6 fixing domes for printed circuit board installation in top shell**

Depending on version:
- **2 pushbuttons, 2-stage, 1 NO contact each, e.g. for enabling function**
- **1 enabling switch, 3-stage, 2 NO contacts**
- **Various handwheel output stages**

Notes
- Suitable front panels see page 36
- Suitable emergency stop device (turn or pull to reset) see page 54
- **Attention:**
- Housings HBA-095561, HBA-095573, HBA-095572 and HBA-095574 suitable only for emergency stop device 106435 short design.
- Depending on version with 2 two-stage push-buttons or 1 three-stage enabling switch.

Dimension drawing

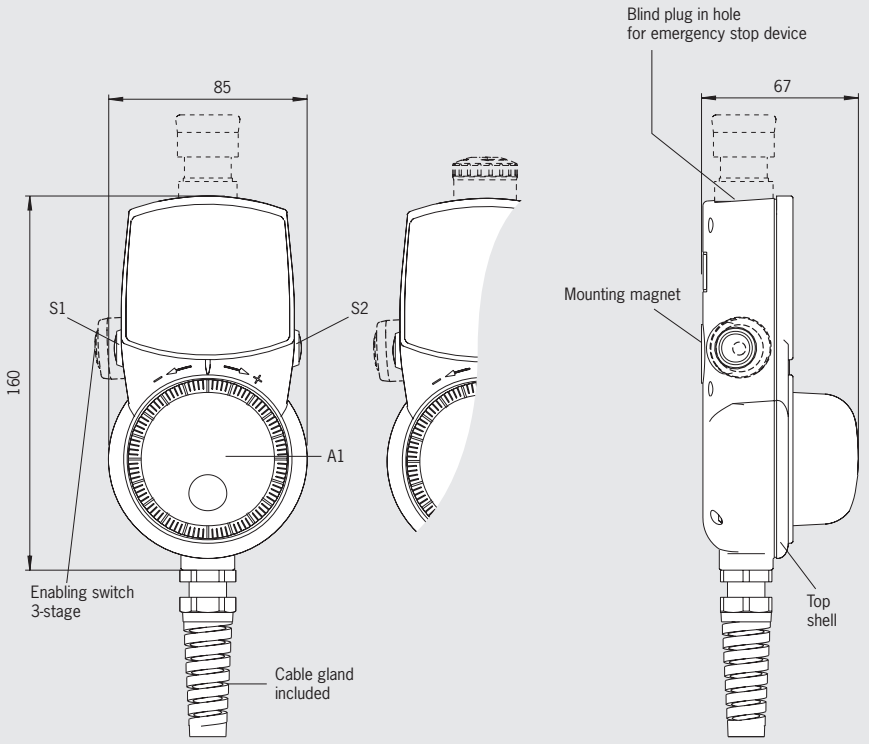

Dimensions of emergency stop devices see page 54

Technical data

Parameter		Value	Unit
HBA housing			
Material		Plastic	
Color		Gray RAL 7040	
Operating temperature		0 ... +50	°C
Storage temperature		-20 ... +50	°C
Degree of protection according to EN 60529 /NEMA		IP 65 / 250-12	
Weight		0.3	kg
Pushbutton, 2-stage, e.g. for enabling function			
Switching elements		2, one NO contact each	
Connection ratings		30 V DC / 100 mA	
Enabling switch ZXE, 3-stage			
Switching elements		1, 2 NO contacts	
Utilization category according to IEC 60947-5-1		DC-13, U_e 24 V, I_e 0.1 A	
Handwheel RS422A (U_B = 5 V DC)			
Pulses/revolution		100	
Power supply		5 ± 5%	V DC
Output specifications		RS422A	
Handwheel push-pull 5 V (U_B = 5 V DC)			
Pulses/revolution		100	
Power supply		5 ± 5%	V DC
Output circuit		5 V push-pull	
Output voltage / output current	HIGH, min.	4.0 V at 0 mA / 3.4 V at 5 mA / 3.0 V at 20 mA	
	LOW, max.	1.3 V at 15 mA	
Handwheel push-pull 5 V (U_B = 10...30 V DC)			
Pulses/revolution		25	
Power supply		10 ... 30	V DC
Output circuit		5 V push-pull	
Output voltage / output current	HIGH, min.	4.9 V at 0 mA / 3.9 V at 5 mA / 3.6 V at 20 mA	
	LOW, max.	1.3 V at 15 mA	
Handwheel push-pull 24 V (U_B = 10...30 V DC)			
Pulses/revolution		100	
Power supply		10 ... 30	V DC
Output circuit		24 V push-pull	
Output voltage / output current	HIGH, min.	U_B - 3 V at 20 mA	
	LOW, max.	3 V at 20 mA	

Ordering table

Version/item	Features							Order no.
	Handwheel				Hole for emergency stop	2 pushbuttons * 2-stage, 1 NO contact each pre-assembled	1 enabling switch ** ZXE, 3-stage, 2 NO contacts pre-assembled	
	Output stage		Power supply	Pulses per revolution				
	RS422	Push-pull U_A	U_B			S1, S2	S1	
Housing HBA-083449	● A05		5 V DC	100	● for emergency stop short and long designs	●		**083449**
Housing HBA-095561	● A05		5 V DC	100	● for emergency stop short design		●	**095561**
Housing HBA-083499		● 5 V G12	10 ... 30 V DC	25	● for emergency stop short and long designs	●		**083499**
Housing HBA-095573		● 5 V G12	10 ... 30 V DC	25	● for emergency stop short design		●	**095573**
Housing HBA-083495		● U_B - 3 V G24	10 ... 30 V DC	100	● for emergency stop short and long designs	●		**083495**
Housing HBA-095572		● U_B - 3 V G24	10 ... 30 V DC	100	● for emergency stop short design		●	**095572**
Housing HBA-086762		● 5 V G05	5 V DC	100	● for emergency stop short and long designs	●		**086762**
Housing HBA-095574		● 5 V G05	5 V DC	100	● for emergency stop short design		●	**095574**

A1 Handwheel RS422A

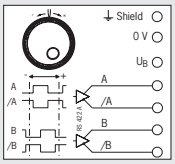

A1 Handwheel push pull

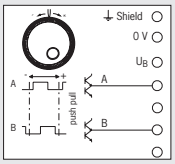

* Travel diagram see page 6

** Travel diagram see page 55

Top shell HBA

- **Material plastic**
- **Color gray or black**

Depending on version:
- **Hole for handwheel HKB**

Notes
- Suitable front panels see page 36

Dimension drawing

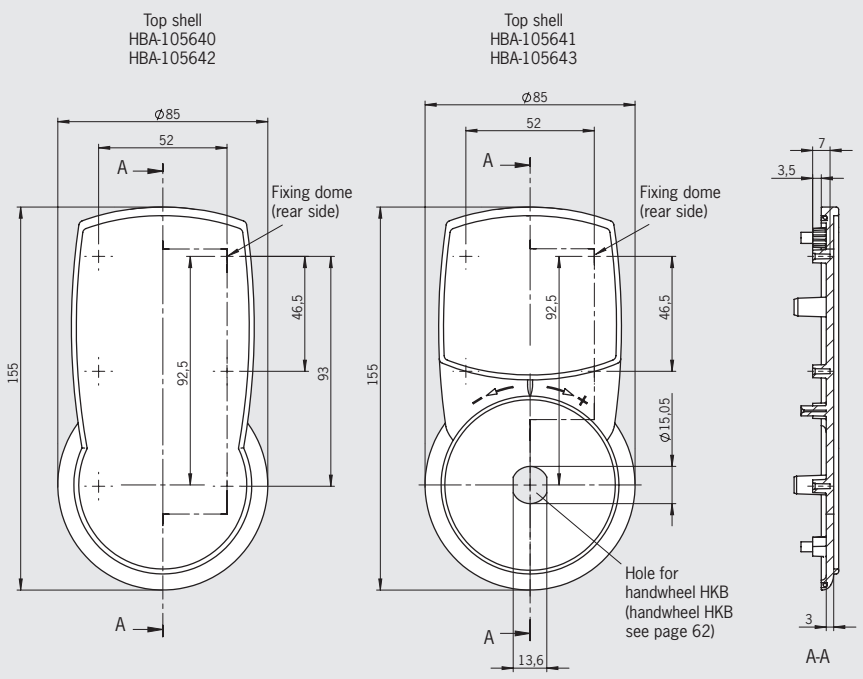

Ordering table

Item	Order no.
Top shell HBA-105640, gray, without hole for handwheel HKB	**105640**
Top shell HBA-105641, gray, with hole for handwheel HKB	**105641**
Top shell HBA-105642, black, without hole for handwheel HKB	**105642**
Top shell HBA-105643, black, with hole for handwheel HKB	**105643**

Bottom shell HBA

- **Material plastic**
- **Color gray or black**

Depending on version:
- **Hole for emergency stop device**
- **Hole for enabling switch ZXE** (3-stage, 2 NO contacts)
- **2 pushbuttons, 2-stage, 1 NO contact each, e.g. for enabling function**

Notes
- Suitable emergency stop device (turn or pull to reset) see page 54
- Suitable enabling switch ZXE (3-stage, 2 NO contacts) see page 55
- Technical data of pushbutton see page 48

Dimension drawing

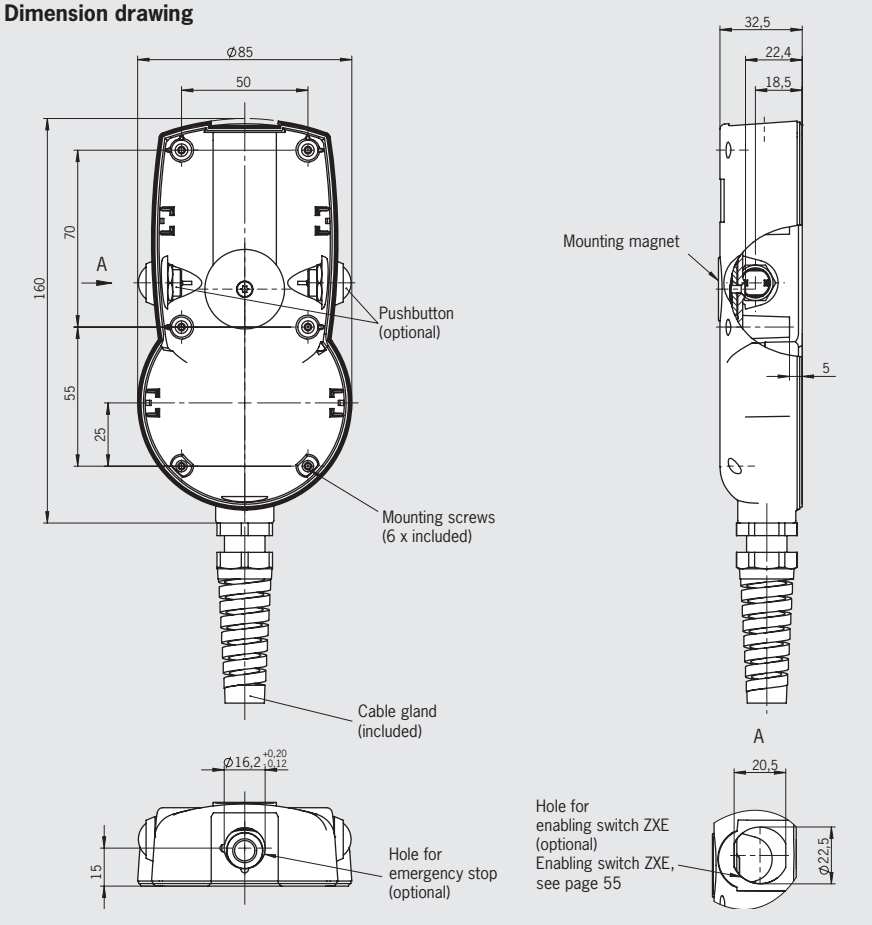

Ordering table

Version/item	Features			Order no.
	Hole for emergency stop device	2 pushbuttons, * 2-stage, 1 NO contact each pre-assembled, e.g. for enabling function S1, S2	Hole for enabling switch ZXE ** 3-stage, 2 NO contacts S1	
Bottom shell HBA-105503, color gray (without holes, without pushbutton)				**105503**
Bottom shell HBA-105504, color gray	● for emergency stop short and long designs			**105504**
Bottom shell HBA-114213, color gray	● for emergency stop short and long designs	●		**114213**
Bottom shell HBA-105506, color gray	● for emergency stop short design		●	**105506**
Bottom shell HBA-105507, color black (without holes, without pushbutton)				**105507**
Bottom shell HBA-105508, color black	● for emergency stop short and long designs			**105508**
Bottom shell HBA-114215, color black	● for emergency stop short and long designs	●		**114215**
Bottom shell HBA-105510, color black	● for emergency stop short design		●	**105510**
		2	3	

* Travel diagram see page 6

** Travel diagram see page 55

Front panels for housing and top shell HBA with and without handwheel

Notes

- Suitable for housing HBA (see page 30 and page 32) and top shell HBA (see page 34)

Dimension drawing

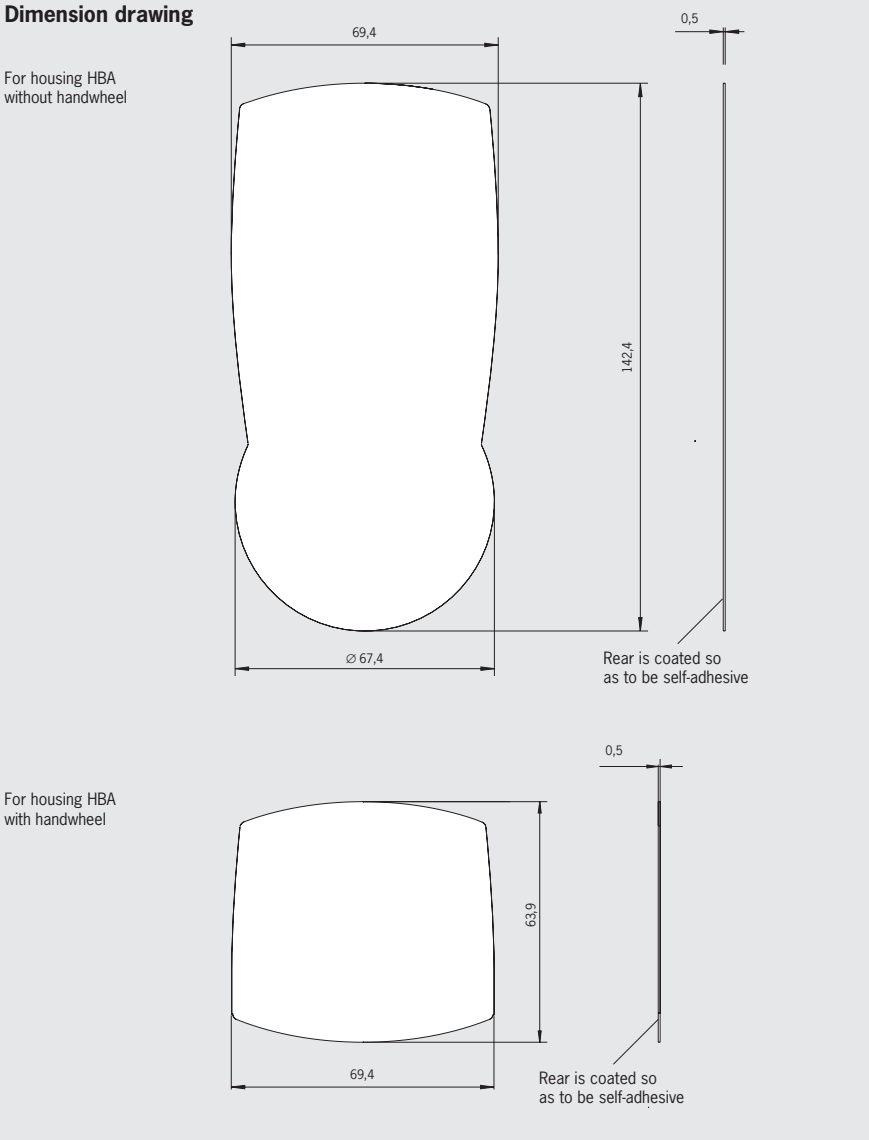

Technical data

Parameter	Value	Unit
Front-panel material	Electrically anodized aluminum, black or silver, rear side with self-adhesive coating	

Ordering table

Item	Order no.
Front panel for housing HBA without handwheel, silver anodized	**084395**
Front panel for housing HBA without handwheel, black anodized	**084396**
Front panel for housing HBA with handwheel, silver anodized	**083635**
Front panel for housing HBA with handwheel, black anodized	**083636**

Hand-held pendant stations HBM kit

The kit is designed to match individual customer specifications. Thanks to its modular configuration, you can construct prototypes and special versions in line with your requirements. To match the housings, aluminum front panels are available in silver or black anodized.

Customer-specific functionality can be achieved by using the components supplied in the kit (pushbutton, selector switch, key-operated switch, handwheel, enabling switch, KE joystick, etc). For connection to the control system, cables with different numbers of wires, plug connectors and the relevant flange sockets are available. The type of protection IP 65 can be achieved using one of the seals included.

Hand-held pendant stations HBM kit

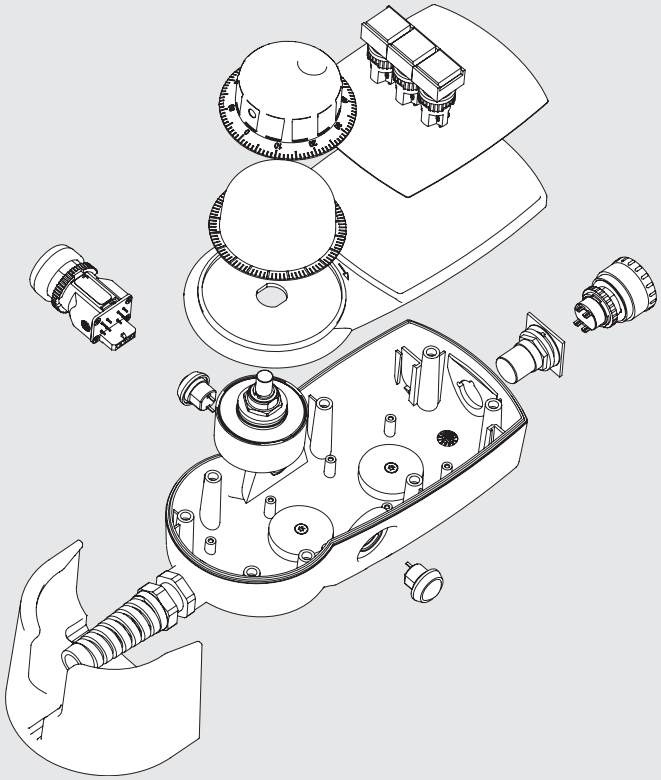

Top shell HBM

- **Material plastic**
- **Color anthracite**

Depending on version:
- **Hole for handwheel HKB**

Notes
- Suitable front panels see page 40

Dimension drawing

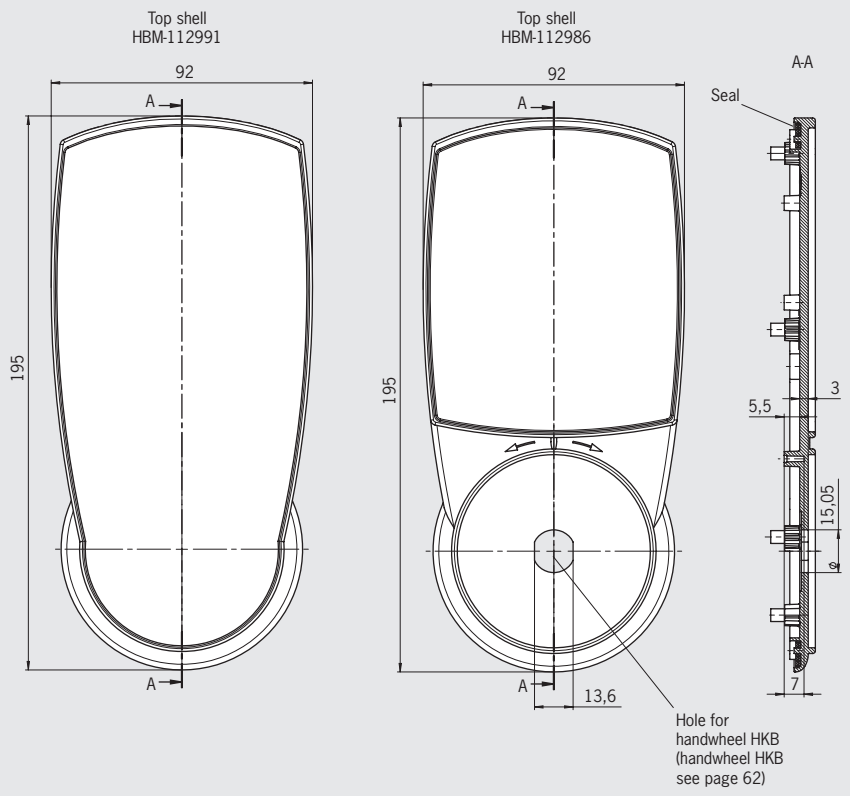

Ordering table

Item	Order no.
Top shell HBM-112991 without hole for handwheel HKB	**112991**
Top shell HBM-112986 with hole for handwheel HKB	**112986**

Bottom shell HBM

- **Material plastic**
- **Color anthracite**

Depending on version:
- **Hole for emergency stop device** (sealed with blind plug)
- **Hole for enabling switch ZXE** (3-stage, 2 NO contacts)
- **2 pushbuttons, 2-stage, 1 NO contact each, e.g. for enabling function**

Notes
- Suitable emergency stop device (turn or pull to reset) see page 54
- Suitable enabling switch ZXE (3-stage, 2 NO contacts) see page 55
- Technical data of pushbutton see page 48

Dimension drawing

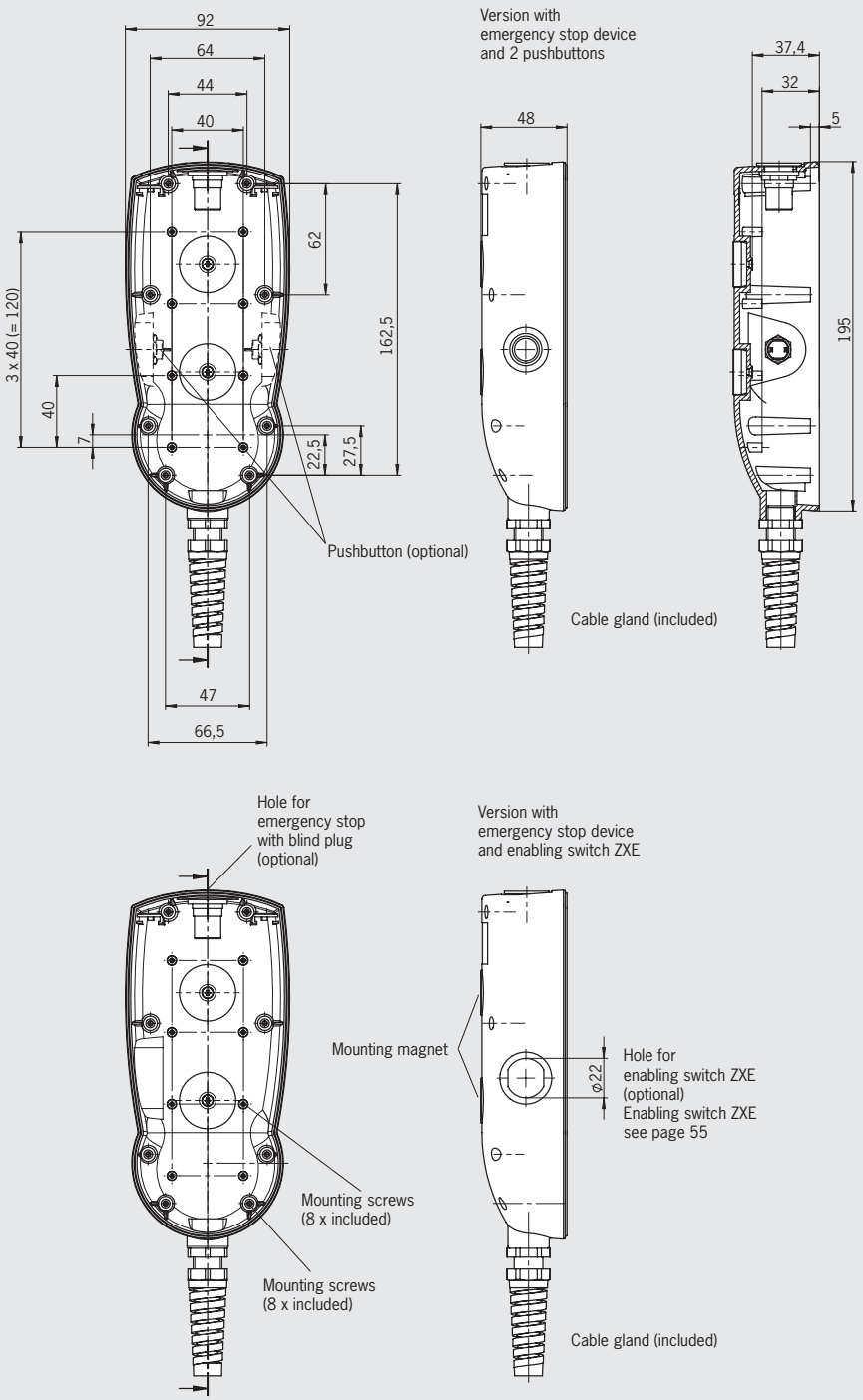

Ordering table

Version/item	Features			Order no.
	Hole for emergency stop device	2 pushbuttons, * 2-stage, 1 NO contact each pre-assembled, e.g. for enabling function S1, S2	Hole for enabling switch ZXE ** S1	
Bottom shell HBM-112949 (without holes, without pushbutton)				**112949**
Bottom shell HBM-112954	●			**112954**
Bottom shell HBM-112958	●	●		**112958**
Bottom shell HBM-112955	●		●	**112955**
		2	3	

* Travel diagram see page 6

** Travel diagram see page 55

Front panels for top shell HBM with and without handwheel

Notes

▶ Suitable for top shell HBM (see page 38)

Dimension drawing

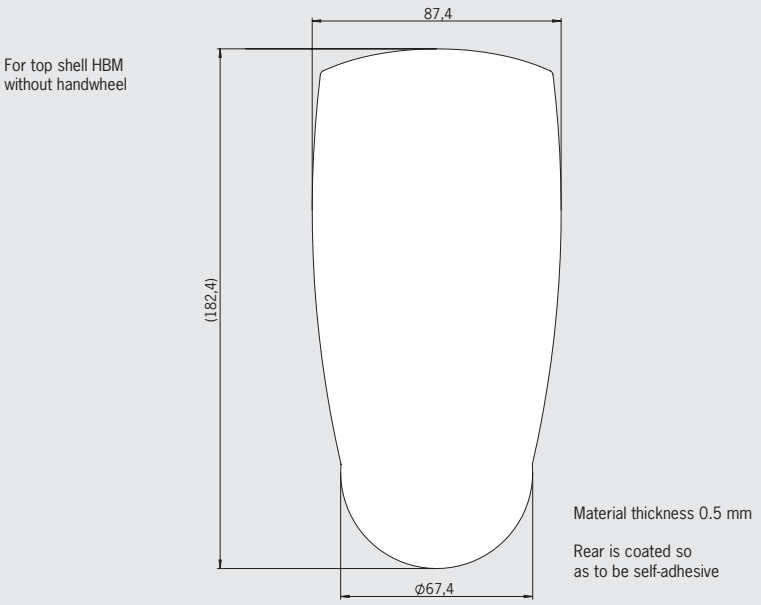

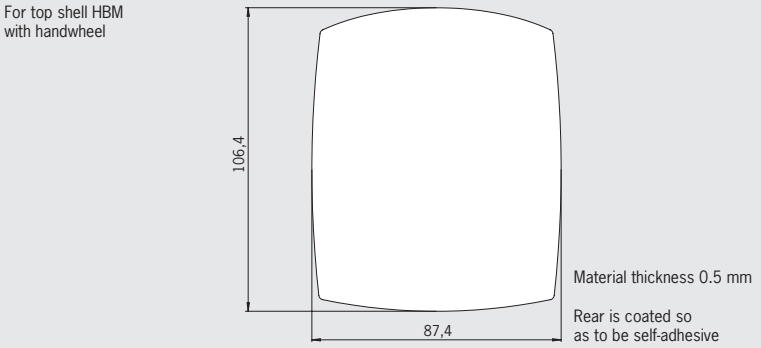

Technical data

Parameter	Value	Unit
Front-panel material	Electrically anodized aluminum, black or silver, rear side with self-adhesive coating	

Ordering table

Item	Order no.
Front panel for top shell HBM without handwheel, silver anodized	**113060**
Front panel for top shell HBM without handwheel, black anodized	**113438**
Front panel for top shell HBM with handwheel, silver anodized	**113061**
Front panel for top shell HBM with handwheel, black anodized	**113440**

Hand-held pendant stations HBL kit

The kit is designed to match individual customer specifications. Thanks to its modular configuration, you can construct prototypes and special versions in line with your requirements. The HBL housings are shaped differently, depending on the safety components to be integrated. Depending on the version, front panels are available for use with or without handwheel.

Customer-specific functionality can be achieved by using the components supplied in the kit (pushbutton, selector switch, enabling switch, handwheel, key-operated rotary switch, KE joystick, etc). The type of protection IP 65 can be achieved using an included seal. For connection to the control system, cables with different numbers of wires, plug connectors and the relevant flange sockets are available.

Hand-held pendant stations HBL kit

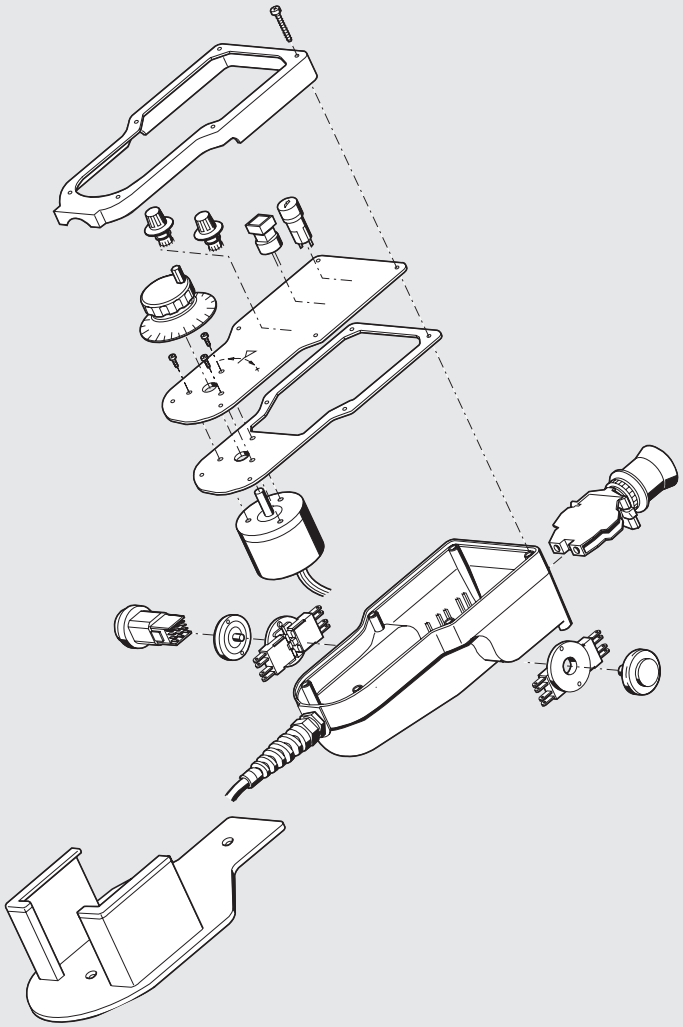

Housing HBL

- **Rubber-coated mounting magnet on the rear of housing**
- **Hanging clip**
- **6 screws for front panel fastening**
- **Cover frame for front panel**
- **Fixing domes for printed circuit board installation**

Depending on version:
- **Fastening nut for cable gland Pg 11 or Pg 13.5**
- **Hole for emergency stop device**
- **2 pushbuttons ZSG, 2-stage, 2 NO contacts each, e.g. for enabling function**
- **Hole on left for enabling switch ZSE**

Notes
- Emergency stop devices see page 56
- Enabling switch ZSE see page 57
- Cable glands see page 53
- Assembly drawings see page 75
- Pg 11 for cable diameter 5 ... 10 mm
- Pg 13.5 for cable diameter 6 ... 12 mm

Dimension drawing

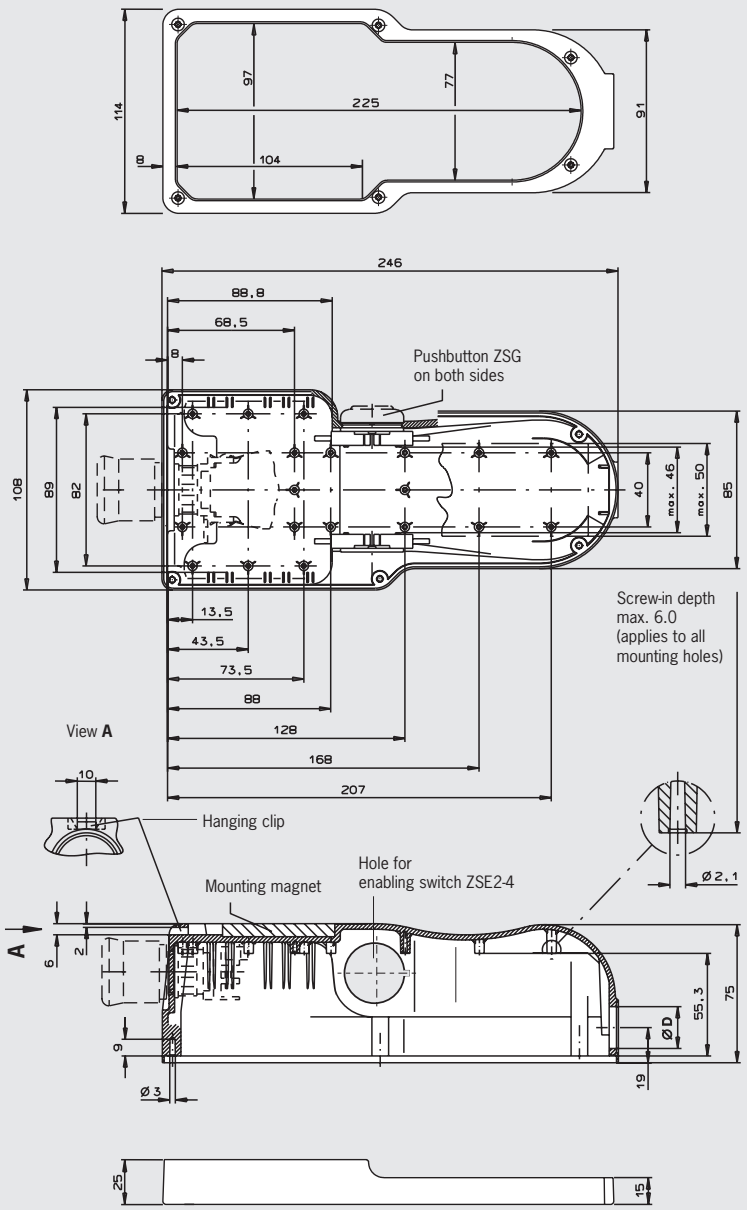

Technical data

Parameter	Value	Unit
Housing HBL		
Material	Plastic	
Color	Blue-gray RAL 7031	
Ambient temperature	0 ... +55	°C
Degree of protection according to EN 60529 / NEMA	IP 65 / 250-12	
Pushbutton ZSG, 2-stage, e.g. for enabling function		
Switching elements	2, 2 NO contacts each	
Utilization category according to IEC 947-5-1	AC-15 U_e 24 V I_e 4 A DC-13 U_e 24 V I_e 3 A	

Ordering table

Version/item	Features						Order no.
	Fixing nut for cable gland (cable gland see page 53)		**Hole for emergency stop *** (emergency stop see page 56)	**Hole for enabling switch ZSE2-2 C1692, 3-stage 2 NO + 1 NC** (enabling switch page 57)	**Hole for enabling switch ZSE2-4 C1943, 3-stage 2 NO + 2 NC** (enabling switch page 57)	**2 pushbuttons ZSG, 2-stage, 2 NO contacts each pre-assembled, e.g. for enabling function**	
	Pg 11	**Pg 13.5**					
Housing HBL-073098	●						**073098**
Housing HBL-072630		●					**072630**
Housing HBL-073113	●		●			●	**073113**
Housing HBL-072631		●	●			●	**072631**
Housing HBL-073109	●			●			**073109**
Housing HBL-072632		●		●			**072632**
Housing HBL-072983	●		●		●		**072983**
Housing HBL-083484		●	●		●		**083484**

* Blind plug ∅ 22 for emergency stop device hole included

Front panel for housing HBL

Dimension drawing

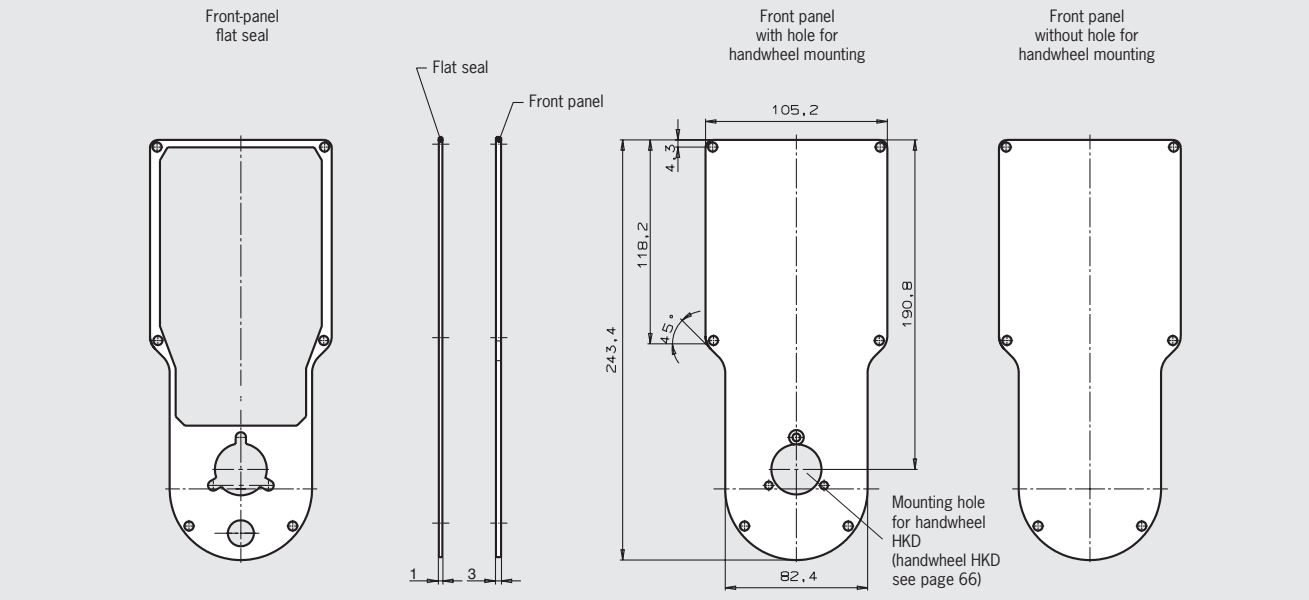

Technical data

Parameter	Value	Unit
Front-panel material	Electrically anodized aluminum, black, NBR, self-adhesive on one side	

Ordering table

Item	Order no.
HBL front panel, with seal	**073138**
HBL front panel, with hole for handwheel HKD and seal	**073139**
Front seal for HBL front panel	**072641**

Connection kit

for designs HBA-102434 and HBA-103037, consisting of 26-pin flange connector and short-circuit plug

Flange connector, 26-pin

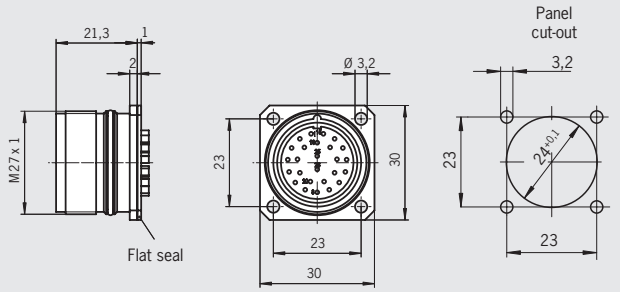

Short-circuit plug, 26-pin for flange connector, 26-pin
(bridged pin 1 with pin 4 and pin 2 with pin 3)

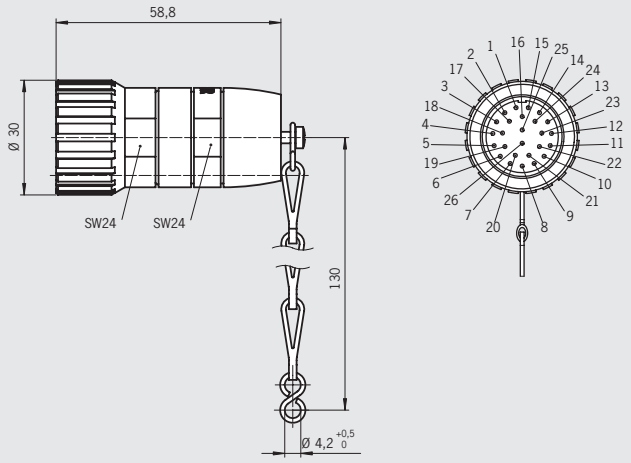

Technical data

Parameter	Value
Flange connector	
Housing material	Metal
Degree of protection according to EN 60529 (inserted)	IP 67
Contact material	Copper alloy
Connection	Soldered connection
Short-circuit plug	
Housing material	Metal
Number of pins	26
Degree of protection according to EN 60529 (inserted)	IP 67
Contact material	Copper alloy
Connection	Crimp connection

Ordering table

Item	Order no.
Flange connector and short-circuit plug	**103042**

Male flange connector

for designs HBAS-072949 and HBAS-094594

Male flange connector, 19-pin with socket contacts

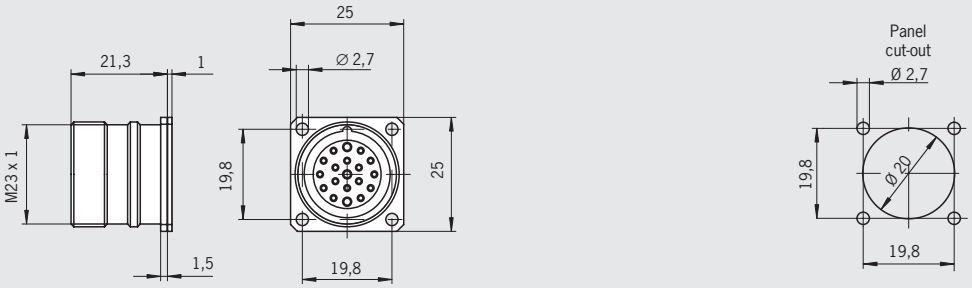

Technical data

Parameter	Value
Housing material	Metal
Number of pins	19
Degree of protection according to EN 60529 (inserted)	IP 65
Contact material	Copper alloy
Connection	Soldered connection

Ordering table

Item	Order no.
Male flange connector, 19-pin with socket contacts	**092374**

Overview of accessories for hand-held pendant station kits

Accessories for kit	Accessories							Page
	EMERGENCY-STOP device	Pushbutton	Selector switch	Key-operated rotary switch	Enabling switch, 3-stage	Plug connector	Connection cables	
Suitable for all designs		●						48
			●					49/50
				●				50
						●		51
							●	52/53
Hand-held pendant stations HBA/HBM	●							54
					●			55
Hand-held pendant stations HBL	●							56
					●			57

Pushbutton

Dimension drawing

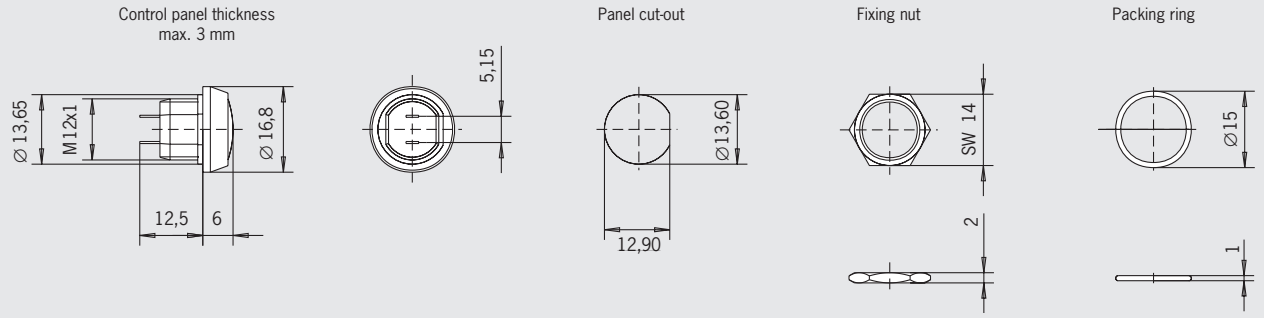

Technical data

Parameter	Value	Unit
Ambient temperature	-25 ... +70	°C
Front degree of protection (integrated in front panel)	IP 67	
Switching principle	Button, snap-action switching element	
Switching elements	1 NO contact	
Switching voltage	30	V DC
Switching current max.	100	mA
Connection	Soldered connection	

Ordering table

Item	Order no.
Pushbutton, black button	**083640**
Pushbutton, red button	**086753**
Pushbutton, green button	**086754**
Pushbutton, blue button	**086757**
Pushbutton, white button	**086755**
Pushbutton, yellow button	**086756**

Illuminated pushbutton (can be individually labeled)

Dimension drawing

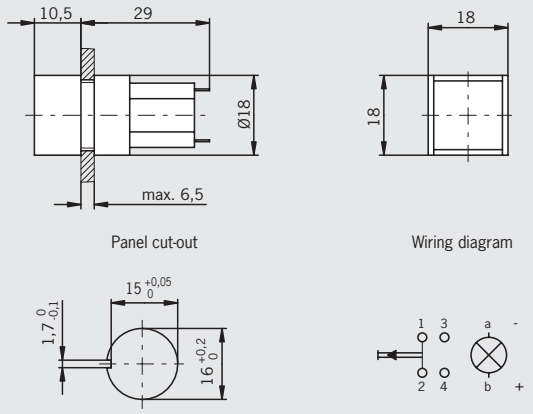

Technical data

Parameter	Value	Unit
Ambient temperature	-25 ... +55	°C
Front degree of protection (integrated in front panel)	IP 65	
Switching principle	Button, snap-action switching element	
Switching elements	1 NO contact, 1 NC contact	
Switching current max.	100	mA
Switching voltage max.	30	V AC/DC
LED	24 V / 14 mA	
Connection	Soldered connection	

Ordering table

Item	Order no.
Pushbutton, illuminated, can be individually labeled (yellow LED)	**074991**
Pushbutton, illuminated, can be individually labeled (white LED)	**098045**

Gray code selector switch (ordering table see page 50)

Dimension drawing

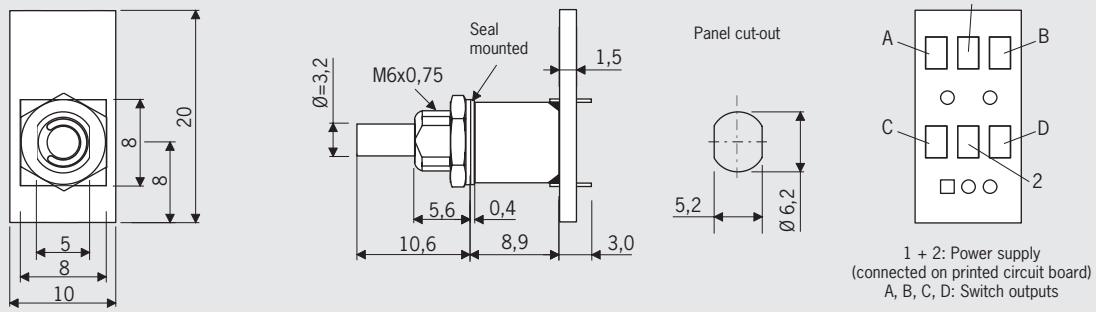

Selector switch 1 of X (ordering table see page 50)

Dimension drawing

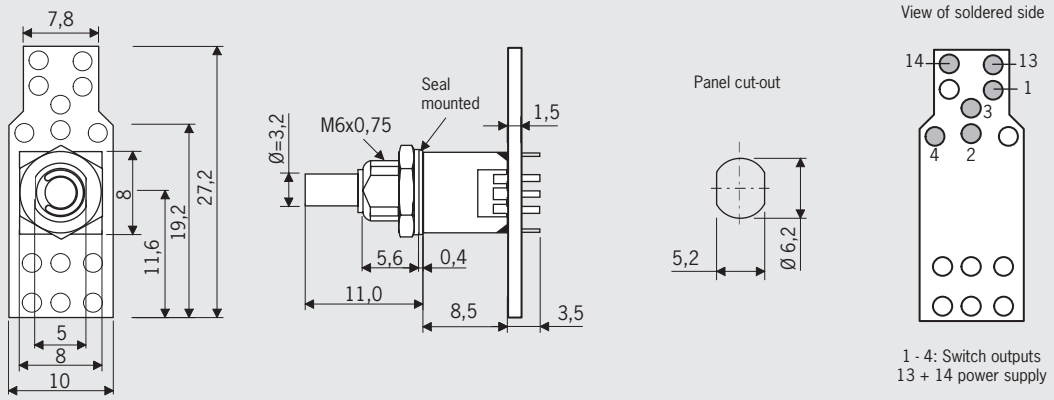

Code table switch with Gray code

Detent position	Output D	C	B	A
1	0	0	0	0
2	0	0	0	1
3	0	0	1	1
4	0	0	1	0
5	0	1	1	0
6	0	1	1	1
7	0	1	0	1
8	0	1	0	0
9	1	1	0	0
10	1	1	0	1
11	1	1	1	1
12	1	1	1	0
13	1	0	1	0
14	1	0	1	1
15	1	0	0	1
16	1	0	0	0

Connections A - D: Switch outputs
Connections 1 - 3: Power supply

Circuit diagrams switch 1 of X

1 of 2

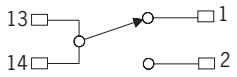

Detent position	Output 1	2
1	1	0
2	0	1

1 of 3

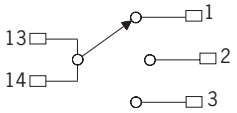

Detent position	Output 1	2	3
1	1	0	0
2	0	1	0
3	0	0	1

1 of 4

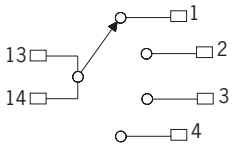

Detent position	Output 1	2	3	4
1	1	0	0	0
2	0	1	0	0
3	0	0	1	0
4	0	0	0	1

Technical data

Parameter	Value	Unit
Front degree of protection (integrated in front panel)	IP 67	
Center point fixing	M6 x 0.75	
Detent positions	2, 3, 4, 5, 6, 7, 8, 12 or 16 depending on item	
Detent angle	Gray code 22.5° / 1 of X: 30°	
Output code	1 of 2, 1 of 3, 1 of 4 or Gray code depending on item	
Breaking capacity max.	0.2	VA
Switching voltage max.	25	V AC/DC
Connection	Soldered connection on printed circuit board	
Max. soldering time	≤ 5 (at t ≤ 260 °C)	s

Rotary knob

Dimension drawing

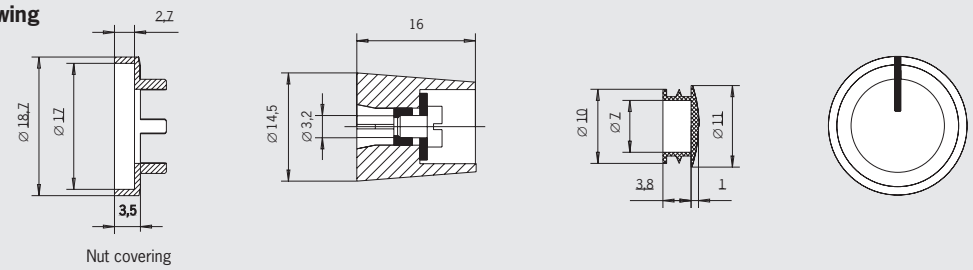

Ordering table

Item	Detent angle	Order no.
Selector switch, 2 detent positions, 1 of 2, break-before-make [1]	30°	**097026**
Selector switch, 3 detent positions, 1 of 3, break-before-make [1]	30°	**097027**
Selector switch, 4 detent positions, 1 of 4, break-before-make [1]	30°	**097028**
Selector switch, 5 detent positions, Gray code, short circuited [2]	22.5°	**097029**
Selector switch, 6 detent positions, Gray code, short circuited [2]	22.5°	**097030**
Selector switch, 7 detent positions, Gray code, short circuited [2]	22.5°	**097031**
Selector switch, 8 detent positions, Gray code, short circuited [2]	22.5°	**097032**
Selector switch, 12 detent positions, Gray code, short circuited [2]	22.5°	**097033**
Selector switch, 16 detent positions, Gray code, short circuited [2]	22.5°	**097034**
Rotary knob, matt black with a marking, collet mounting for axis 3.2 mm	–	**097141**

1) break-before-make: all outputs are open between the switch positions.

2) short circuited: the related outputs are connected between the switch positions.

Key-operated rotary switch

Dimension drawing

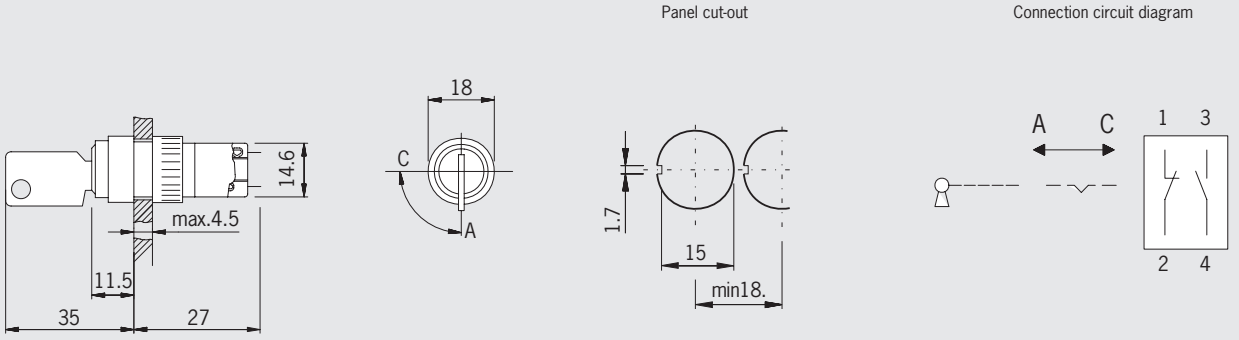

Technical data

Parameter	Value	Unit
Ambient temperature	-25 ... +55	°C
Front degree of protection (integrated in front panel) / NEMA	IP 65 / 250-12	
Switching principle	Snap-action switching element	
Switching element	1 NO contact, 1 NC contact	
Switching voltage max.	30	V AC/DC
Switching current max.	250	mA
Connection	Soldered connection	

Ordering table

Item		Order no.
Key-operated rotary switch	Key removable in both positions	**083639**
Replacement key		**092386**

Plug connector

Number of pins	D	L	Cable Ø
35	40.2	103	8.0 - 12.0
28	37.2	97	8.0 - 12.0
23	33.9	91	6.0 - 10.0
12	27.5	81	5.5 - 9.5

Dimension drawing

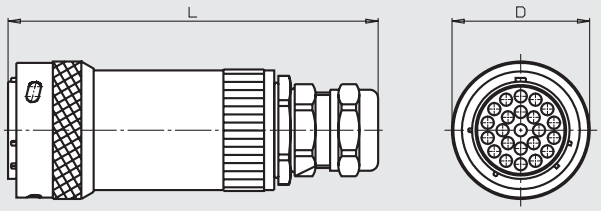

Flange connectors

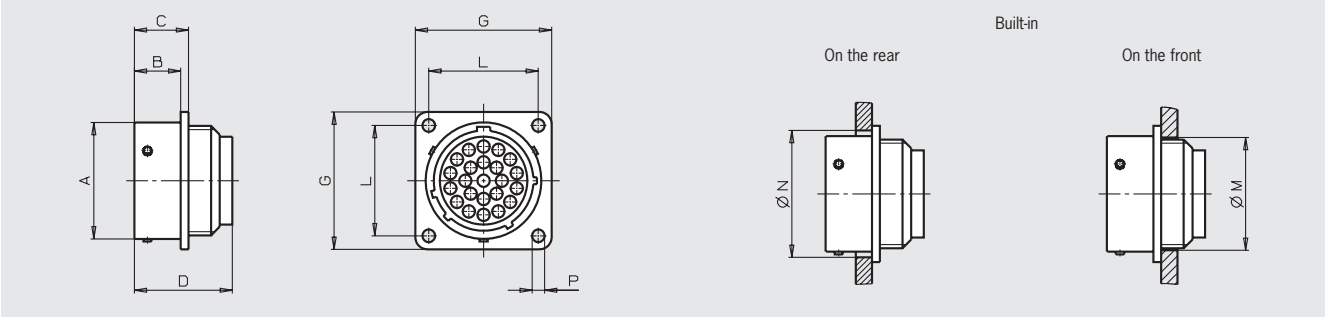

Number of pins	A	B_{max}	C_{max}	D_{max}	G_{max}	L	M	N	P
35	34.9	14.6	17.3	25.7	39.9	31.8	34.1	37.7	3.1
28	31.7	14.6	17.3	25.7	36.8	29.4	30.9	34.5	3.1
23	28.5	11.4	13.3	24.1	33.6	27	27.8	31.3	3.1
12	22.2	11.4	13.3	24.1	28.8	22.9	21.4	25	3.1

Short-circuit plug

Number of pins	D	L	LK
35	40.2	84	255
28	37.2	78	255
23	33.9	72	252
12	27.5	59.4	251

Dimension drawing

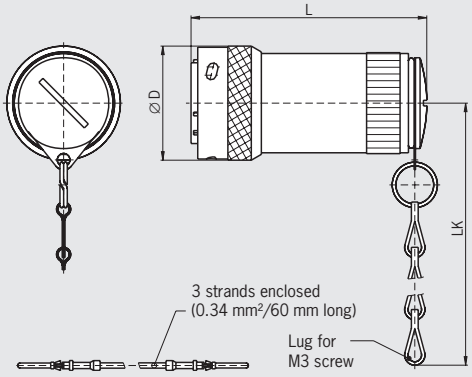

Technical data

Parameter	Value	Unit
Connecting plug/flange socket		
Housing material	Metal	
Number of pins	12 / 23 / 28 / 35	
Degree of protection according to EN 60529 (inserted) / NEMA	IP 65 / 250-12	

Ordering table

Item	Connection	Order no.
Plug connector, 35-pin with pin contacts	Crimp contacts (included) *	**074395**
Plug connector, 28-pin with pin contacts	Crimp contacts (included) *	**074394**
Plug connector, 23-pin with pin contacts	Crimp contacts (included) *	**074393**
Plug connector, 12-pin with pin contacts	Crimp contacts (included) *	**086748**
Flange socket, 35-pin with socket contacts	Crimp contacts (included) *	**074386**
Flange socket, 28-pin with socket contacts	Crimp contacts (included) *	**074385**
Flange socket, 23-pin with socket contacts	Crimp contacts (included) *	**074384**
Flange socket, 12-pin with socket contacts	Crimp contacts (included) *	**086749**
Short-circuit plug with chain, 35-pin	Crimp contacts (included) *	**083459**
Short-circuit plug with chain, 28-pin	Crimp contacts (included) *	**083458**
Short-circuit plug with chain, 23-pin	Crimp contacts (included) *	**083457**
Short-circuit plug with chain, 12-pin	Crimp contacts (included) *	**087802**

* Suitable crimping tool Souriau S16RCM20 Crimping tool for machined contacts
Suitable extraction tool Souriau RX2025GE1 Extraction tool

Cable coiled and straight

View of cable cross-section

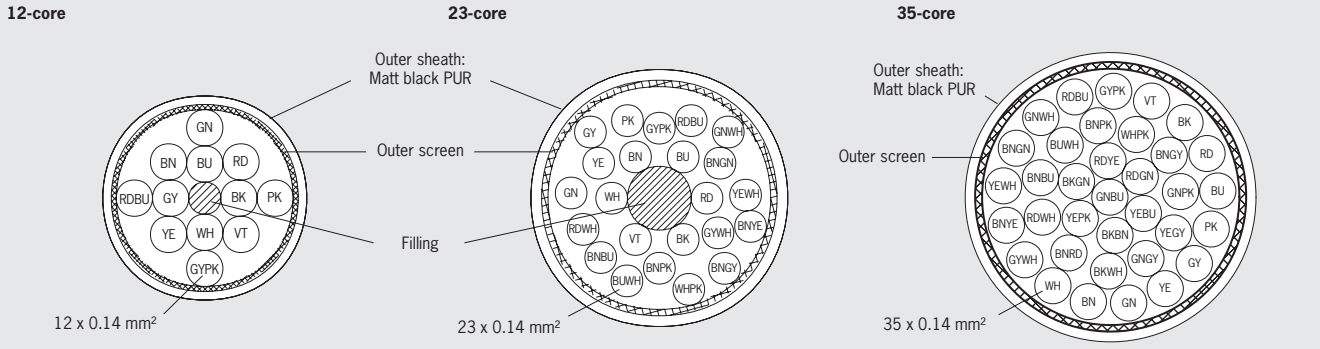

Dimensions of coiled version

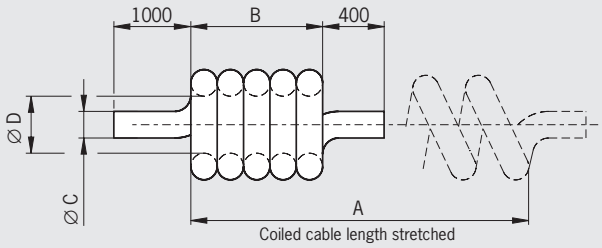

Technical data

Parameter		Value	Unit
Cable resistance		≤ 145	Ω/km
Test voltage core / core		1.0	kVrms
Test voltage core / screen		1.0	kVrms
Insulation resistance	12-core and 23-core	≥ 200	MΩ
	35-core	≥ 20	
Operating temperature		-10 ... +70	°C
Bending radius	once	≥ 10 x cable diameter	
	several times	≥ 15 x cable diameter	

Ordering table

Item	Cable length [mm]	A [mm]	B [mm]	∅ C [mm]	∅ D [mm]	Order no.
12-core, coiled cable	3,900	Approx. 2,500	550 ± 20	6 ± 0.3	8 ± 2	**086721**
12-core, coiled cable	5,400	Approx. 4,000	880 ± 20	6 ± 0.3	8 ± 2	**086722**
12-core, straight cable	3,500	–	–	–	–	**087379**
12-core, straight cable	5,000	–	–	–	–	**087380**
12-core, straight cable	10,000	–	–	–	–	**087381**
23-core, coiled cable	3,900	Approx. 2,500	550 ± 20	7.5 ± 0.3	10 ± 2	**087408**
23-core, coiled cable	5,400	Approx. 4,000	880 ± 20	7.5 ± 0.3	10 ± 2	**087409**
23-core, straight cable	3,500	–	–	–	–	**087382**
23-core, straight cable	5,000	–	–	–	–	**087383**
23-core, straight cable	10,000	–	–	–	–	**087384**
35-core, coiled cable	3,900	Approx. 2,500	550 ± 20	8 ± 0.5	10 ± 2	**097190**
35-core, coiled cable	5,400	Approx. 4,000	880 ± 20	8 ± 0.5	10 ± 2	**097191**
35-core, straight cable	3,500	–	–	–	–	**097189**
35-core, straight cable	5,000	–	–	–	–	**097188**
35-core, straight cable	10,000	–	–	–	–	**097187**

Cable gland with anti-kink spiral

Dimension drawing

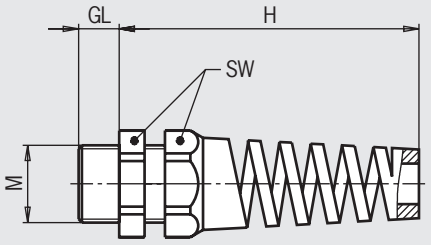

Ordering table

Thread M	Use	Cable diameter	SW	GL	H
M16x1.5	Kit HBA/HBM	5 - 10	22	8	71
Pg 11	Kit HBL	5 - 10	22	11	71
Pg 13.5	Kit HBL	6 - 12	24	12.5	81

Ordering table

Item	Order no.
Cable gland M16x1.5 with anti-kink spiral, color black	**083641**
Cable gland Pg 11 with anti-kink spiral and fixing nut, color black	**073982**
Cable gland Pg 13.5 with anti-kink spiral and fixing nut, color black	**073983**

EMERGENCY STOP devices according to EN ISO 13850

- **With pull-to-reset button**
- **EMERGENCY STOP device for housing HBA/HBM without enabling switch ZXE, 3-stage**

Notes

- The EMERGENCY STOP device engages when actuated by pressing, unlocks when pulled, and is overload-proof
- Do not use with housing HBA/HBM with 3-stage enabling switch ZXE

Dimension drawing

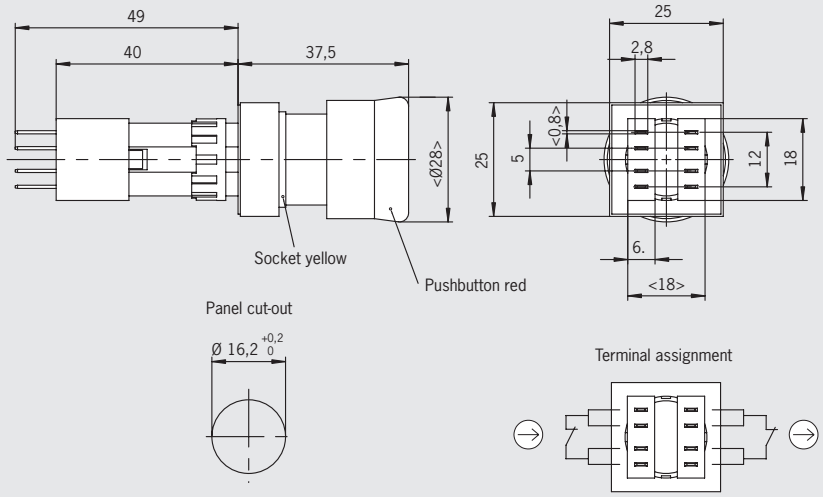

Technical data

Parameter	Value	Unit
Actuating element		
Color of actuating button	Red	
Color of bottom part	Yellow	
Switching elements	2, one positively driven contact each	
Degree of protection	IP 65	
Utilization category according to IEC 947-5-1	DC-13 U_e 24 V I_e 3 A	

- **With turn-to-reset button**
- **EMERGENCY STOP device for housing HBA/HBM**
- **Bottom of housing yellow**

Notes

- The EMERGENCY STOP device engages when actuated by pressing, unlocks when turned or pulled, and is tamper proof

Dimension drawing

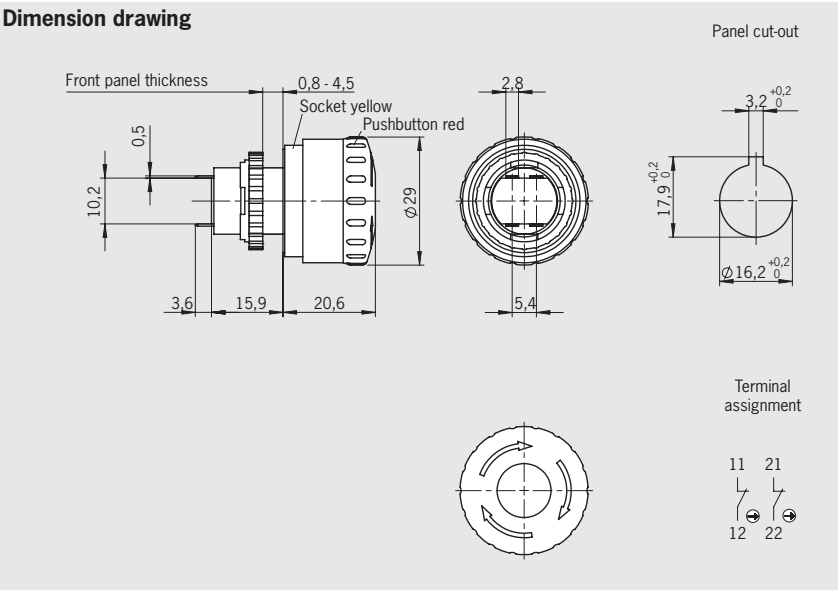

Technical data

Parameter	Value	Unit
Actuating element		
Color of actuating button	Red	
Color of bottom part	Yellow	
Switching elements	2 positively driven contacts	
Degree of protection	IP 65	
Connection ratings	24 V DC / 3 A	

Ordering table

Item	Order no.
EMERGENCY STOP device (pull-to-reset button) with 2 switching elements, 1 positively driven contact each, long design	**096298**
EMERGENCY STOP device (pull-to-reset button and turn-to-reset button), 2 positively driven contacts, short design	**106435**
Blind plug for EMERGENCY STOP device mounting hole	**083653**

Enabling switch ZXE-091336, 3-stage, 2 NO contacts

Notes
- Enabling switch ZXE-091336 for use in housing HBA/HBM (see page 31/33/35/39)

Switching elements
- **2202** 2 NO

Dimension drawing

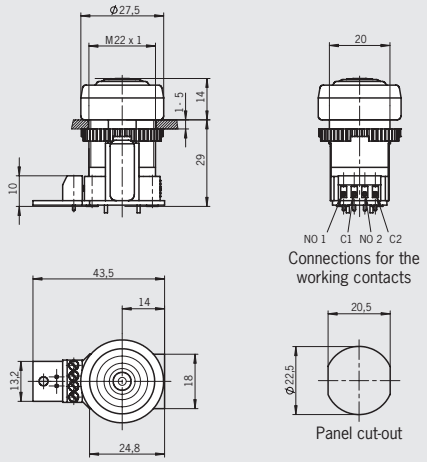

Enabling switch ZXE-104833 with click, 3-stage, 2 NO contacts

Notes
- Enabling switch ZXE-104833 for use in housing HBA/HBM (see page 31/33/35/39)
- A click sounds during the change from stage 1 to stage 2 and during the return from stage 2 to stage 1.

Switching elements
- **2202** 2 NO

Dimension drawing

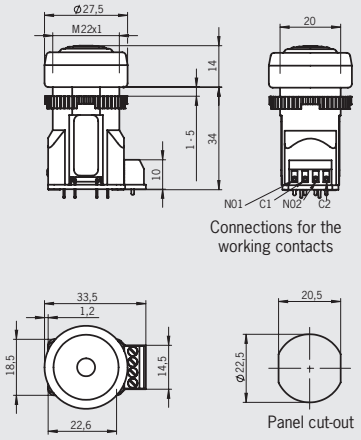

Wiring diagrams/function sequence ZXE

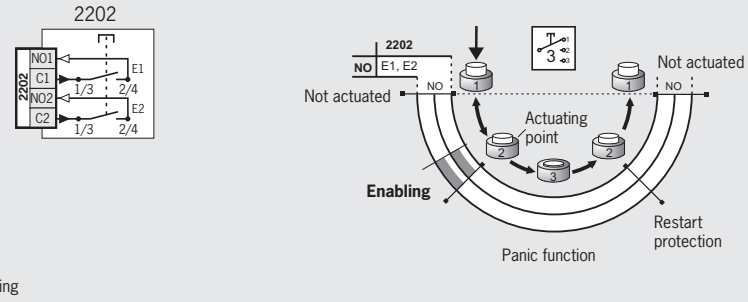

Technical data

Parameter	Value	Unit
Housing material	Polyamide, black	
Protective cap material	CR (neoprene), black	
Degree of protection according to IEC 529	IP65 on front	
Ambient temperature	- 5 ... + 60	°C
Switching principle	Slow-action contact element	
Utilization category according to IEC 947-5-1	DC-13 U_e 24 V I_e 0.1 A	
Weight	Approx. 0.03	kg

Ordering table

Item	Particularity	Switching contacts	Switch type	Order no.
ZXE-091336	-	2 NO contacts	Dual-channel	**091336**
ZXE-104833	Click noise on operation	2 NO contacts	Dual-channel	**104833**

EMERGENCY STOP device, 22 mm with pull-to-reset button according to EN ISO 13850

Notes

- The EMERGENCY STOP device engages when actuated by pressing, unlocks when pulled, and is overload-proof
- Usage only for the following housings:
- HBL-072631
- HBL-072983
- HBL-073113
- HBL-083484

Dimension drawing

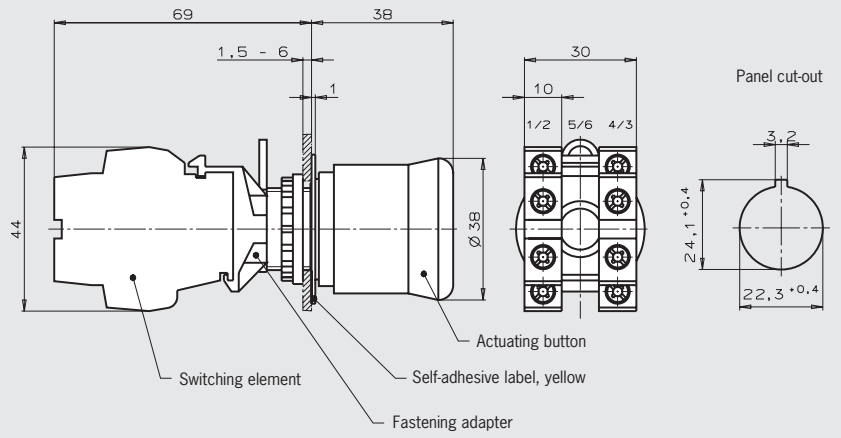

Technical data

Parameter	Value	Unit
Color of actuating button	Red	
Color self-adhesive label	Yellow	
Switching element	2 NC contacts	
Utilization category according to IEC 947-5-1	DC-13 U_e 24 V I_e 2.75 A	

Ordering table

Item	Order no.
EMERGENCY STOP device, complete with switching elements (2 x NC contacts), pull-to-reset button	**073985**
Blind plug for EMERGENCY STOP device mounting hole	**059622**

Enabling switch ZSE2-2, 3-stage, 1 positively driven contact

Notes

- Enabling switch ZSE2-2 C1692 for use in housings HBL-073109 and HBL-072632 (see page 42)

Switching elements

- **210** 2 NO + 1 NC ⊖

Dimension drawing

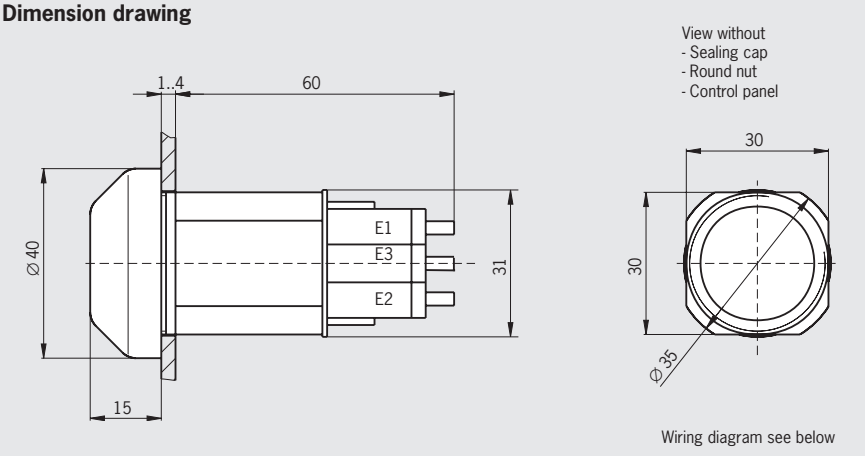

Enabling switch ZSE2-4, 3-stage, 2 positively driven contacts

Notes

- Enabling switch ZSE2-4 C1943 for use in housings HBL-072983 and HBL-083484 (see page 42)

Switching elements

- **220** 2 NO + 2 NC ⊖

Dimension drawing

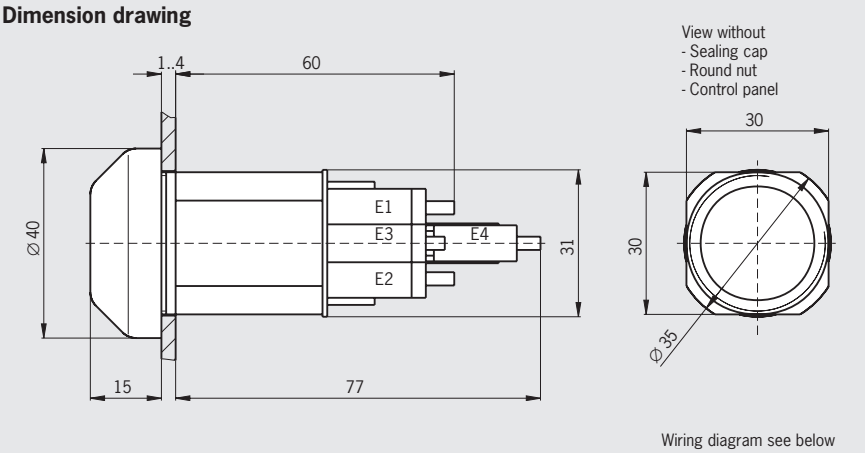

Wiring diagrams/function sequence ZSE 2-2 and ZSE 2-4

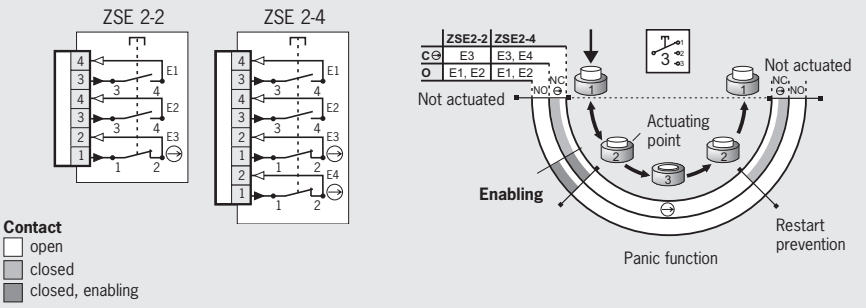

Technical data

Parameter	Value	Unit
Housing material	Plastic	
Fastening hole	∅ 30.5 +0.5	mm
Degree of protection according to IEC 529	IP65 on front	
Ambient temperature	- 5 ... + 60	°C
Switching principle	Slow-action contact element	
Utilization category according to IEC 947-5-1	AC-15 U_e 24 V I_e 4 A DC-13 U_e 24 V I_e 3 A	
Weight	Approx. 0.1	kg

Ordering table

Item	Switching contacts	Switch type	Order no.
ZSE2-2 C 1692	2 NO contacts + 1 pos. driven contact	Single-channel	**070752**
ZSE2-4 C 1943	2 NO contacts + 2 pos. driven contact	Dual-channel	**083477**

Holder HBA

Technical data

Parameter	Value	Unit
Housing material	Plastic	
Fixing system	Screws	
Ambient temperature	-5 to +60	°C
Weight	Approx. 0.1	kg

Ordering table

Item	Order no.
Holder HBA gray	**072828**
Holder HBA black	**100221**
Holder HBA gray, enlarged handwheel cut-out *	**072935**
Holder HBA black, enlarged handwheel cut-out *	**109979**

* Operation of the handwheel in the holder possible

Dimension drawing

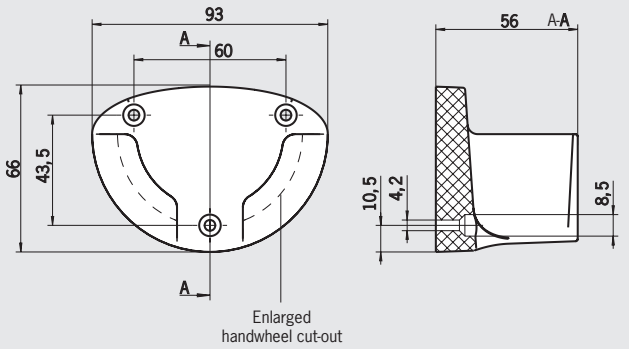

Holder HBM

Technical data

Parameter	Value	Unit
Housing material	Plastic	
Fixing system	Screws	
Ambient temperature	-5 to +60	°C
Weight	Approx. 0.1	kg

Ordering table

Item	Order no.
Holder HBM	**112335**

Dimension drawing

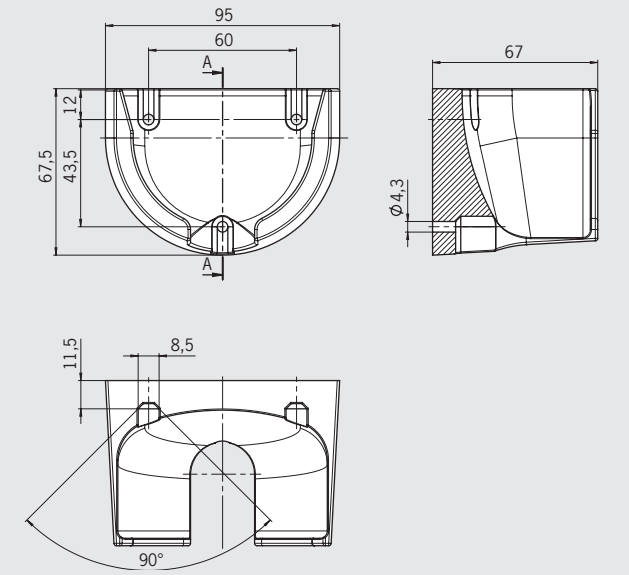

Holder HBL

Technical data

Parameter	Value	Unit
Housing material	Plastic	
Fixing system	Screws	
Ambient temperature	-5 to +60	°C
Weight	Approx. 0.1	kg

Ordering table

Item	Order no.
Holder HBL	**084397**

Dimension drawing

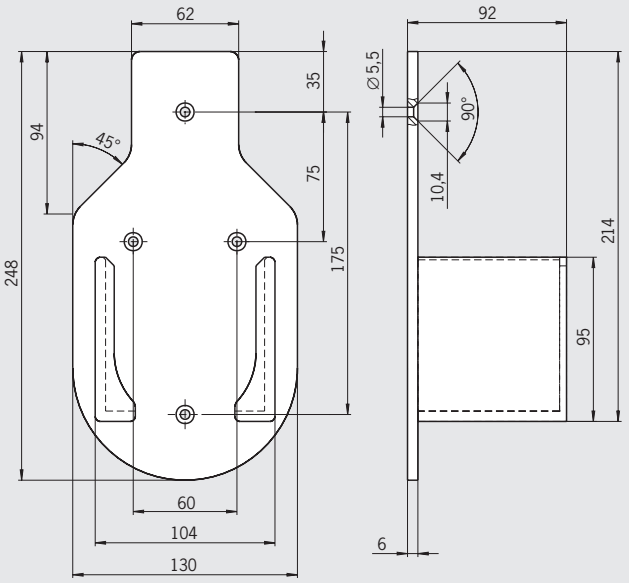

Function and technology used in handwheels

The change from a handwheel directly coupled to the spindle or axes to CNC-controlled axes has meant dramatic new developments for the handwheels. The rotation of the handwheel generates square-wave outputs. The CNC axis controller evaluates the pulses and so signals the axis to move. With over 20 years of handwheel experience, EUCHNER provides a wide selection of handwheels built with the finest quality and highest possible reliability.

Daily use of handwheels places high demands on the mechanical functioning. With twin bearings and a wear-free detent mechanism, the EUCHNER handwheels are the optimum choice for trouble-free operation. The detent moment maintains position even in the event of machine vibration. The detent moment and 100 or 25 pulses per revolution allow a desired value to be set quickly, reliably and accurately. In addition to the manual positioning of axes with CNC-controlled machines, EUCHNER also offers handwheels used for medical and telecommunication applications. EUCHNER also offers handwheels for these applications.

Magnetic detent mechanism

Handwheels with magnetic detent are characterized by their absolutely wear-free and noiseless detent mechanism.

With 100 detent positions (100 or 25 pulses)

The detent mechanism is generated by a magnetic field. A combination of 100 magnetic north/south positions is generated by the opposing magnetic fields with one revolution of the handwheel. Thanks to an air gap, the detent mechanism has no wear and is absolutely maintenance-free. With two ball bearings, the bearing assembly of the handwheel can withstand high axial and radial forces. Different circuit outputs are available for all current control systems.

There are three different designs available:

- Design HKB
  - Ideal for flat machine panels and small, light hand-held pendant stations.

Handwheel HKB

- Design HKC
  - Suitable for installation in operator panels
  - Its design makes it particularly suitable for flat operator panels

Handwheel HKC

- Design HKD
  - Suitable for installation in operator panels and EUCHNER hand-held pendant stations from series HBL
  - Suitable for installation in universal turning and milling machines for axis movement, for example

Handwheel HKD

Mechanical detent mechanism

Handwheels with mechanical detent are characterized by their light weight and shallow mounting depth.

With 100 detent positions (100 or 25 pulses)

A toothed rotor working in conjunction with a roller creates the detent mechanism. The roller is pushed between the teeth of the rotor by a spring and dial. The detent moment is produced by the movement of the roller over the teeth.

There are two different designs available:

- Design HWA
  - Suitable for installation in operator panels.
  - Suitable for installation in EUCHNER hand-held pendant stations
  - With center point fixing

Handwheel HWA

- Design HWB
  - Suitable for installation in operator panels
  - With 3-point fixing

Handwheel HWB

Handwheel HKB

- **100 detent positions per revolution**
- **Wear-free magnetic detent mechanism**
- **100 or 25 pulses per revolution**
- **Key function in axial direction optional**
- **Ideal for flat operator panels and small, light hand-held pendant stations like HBA/HBM**

Notes

- Output A05 suitable for Siemens control systems with RS422 input
- Output G05 suitable for Fanuc control systems
- Dial: see accessories page 72
- Front panel: see accessories page 72

Dimension drawing

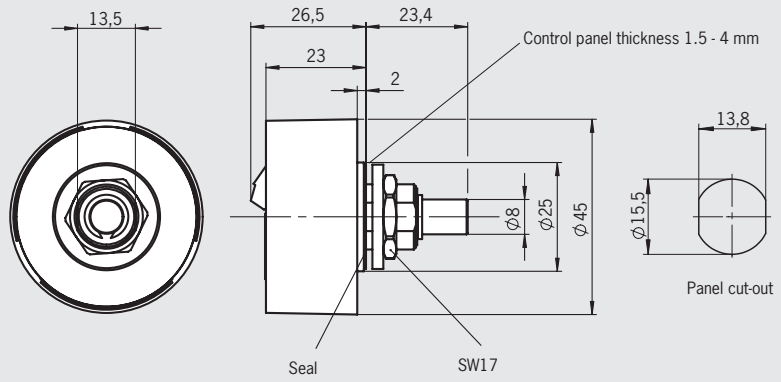

Version with key function

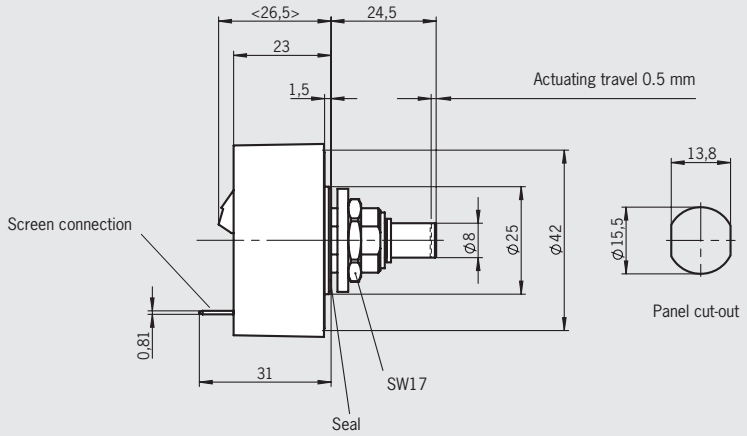

Ordering table

Series	Number of pulses per revolution	Connection	Detent positions	Outputs	Order No./item
HKB	25	**S** Screw terminal	100	**G12** Push-pull 5 V U_B = 10 ... 30 V DC	**105137** HKB025S7G12
	100	**S** Screw terminal	100	**A05** RS422A U_B = 5 V DC	**105134** HKB100S7A05
				A12 RS422A U_B = 10 ... 30 V DC	**105135** HKB100S7A12
				G05 5 V push-pull U_B = 5 V DC	**105136** HKB100S7G05
				G24 Push-pull 10...30 V U_B = 10 ... 30 V DC	**105138** HKB100S7G24
HKB with key function	100	**S** Screw terminal	100	**A05** RS422A U_B = 5 V DC	**109429** HKB100S7A05K

Technical data

Parameter		Value		Unit
Pulses per revolution		2 x 25 or 2 x 100		
Detent positions		100		
Housing material		Aluminum		
Weight		0.095		kg
Detent mechanism		Magnetic		
Shaft loading, axial, max.		25		N
Shaft loading, radial, max.		40		N
Mechanical life, min.		5×10^6		Rev.
Operating temperature		0 ... +50		°C
Storage temperature		-20 ... +50		°C
Atmospheric humidity, max.		80% (condensation not permissible)		
Front degree of protection	acc. to EN 60529/IEC 529	IP 65		
	acc. to NEMA 250	250-12		
Resistance to vibration Vibrations (3 axes) Shock (3 axes)		 DIN/IEC 68-2-6 DIN/IEC 68-2-27		
EMC protection requirements in accordance with CE		EN 61000-6-2, EN 61000-6-4		
Key function				
Mechanical life, min.		1×10^6 actuations		
Actuating travel		0.3 ... 0.7 mm		
Specification output OUT		Output stage		
		A05/G05	A12/G12/G24	
Operating voltage U_B		DC 5 V ± 5 %	DC 10 ... 30 V	
Output voltage	HIGH (1), min.	4.0 V/0 mA	–	
		3.4 V/5 mA	–	
		3.0 V/20 mA	U_B - 3 V/20 mA	
	LOW (0), max.	1.3 V/15 mA	3 V/20 mA	
Output circuit RS422A				
Output stage		**A05**	**A12**	
Output signals		A, /A, B, /B		
Operating voltage U_B		5 ± 5 %	10 ... 30	V DC
Operating current, no load, max.		80		mA
Output circuit		According to RS422A, use RS422 differential receiver module		
Output signals cw (clockwise rotation)		25 pulses 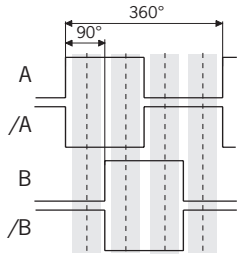 	100 pulses 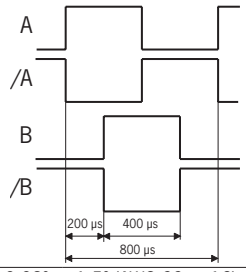 	
Terminal assignment		Screw terminal, 7-pin, conductor cross-section 0.08² ... 1.5² (AWG 22 ... 16) Tightening torque, max. 0.5 Nm without key function 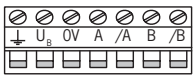 	with key function 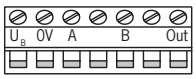 	
Output circuit, push-pull				
Output stage		**G05**	**G12** / **G24**	
Output signals		A, B		
Operating voltage U_B		5 ± 5 %	10 ... 30	V DC
Operating current, no load, max.		80		mA
Output voltage	HIGH (1), min.	4.0 V / 0 mA	4.9 V / 0 mA / –	
		3.4 V / 5 mA	3.9 V / 5 mA / –	
		3.0 V / 20 mA	3.6 V / 20 mA / U_B - 3 V / 20 mA	
	LOW (0), max.	1.3 V / 15 mA	1.3 V / 15 mA / 3 V / 20 mA	
Output current per output, max.		20		mA
Output signals cw (clockwise rotation)		25 pulses 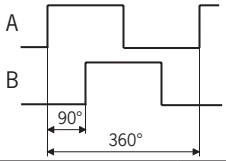 	100 pulses 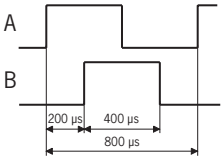 	
Terminal assignment		Screw terminal, 7-pin, conductor cross-section 0.08² ... 1.5² (AWG 22 ... 16) Tightening torque, max. 0.5 Nm without key function 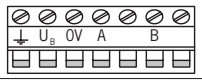 	with key function 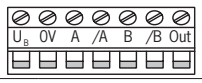 	

Handwheel HKC

- **100 detent positions per revolution**
- **Wear-free magnetic detent mechanism**
- **100 or 25 pulses per revolution**
- **Flat design**

Dimension drawing

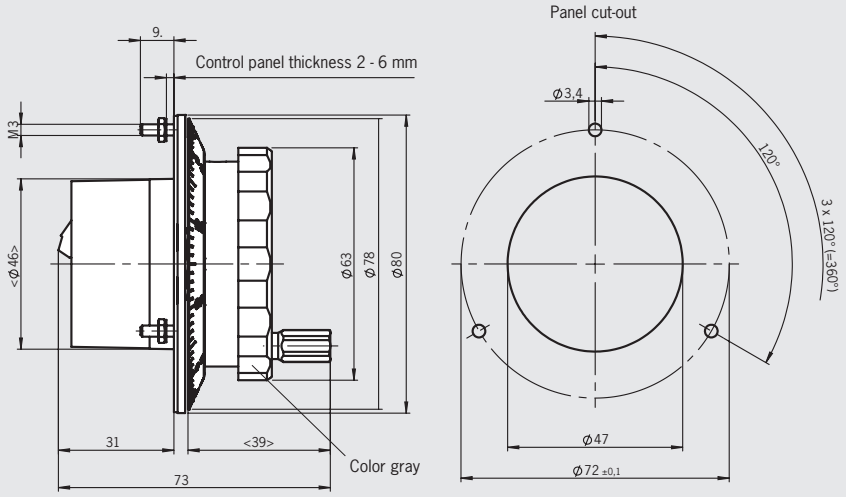

Notes

- Output A05 suitable for Siemens control systems with RS422 input
- Output G05 suitable for Fanuc control systems

Ordering table

Series	Number of pulses per revolution	Connection	Detent positions	Outputs	Order No./item
HKC	25	**S** Screw terminal	100	**G12** Push-pull 5 V U_B = 10 ... 30 V DC	**072940** HKC025S100G12
	100	**S** Screw terminal	100	**A05** RS422A U_B = 5 V DC	**087733** HKC100S100A05
				G05 Push-pull 5 V U_B = 5 V DC	**082573** HKC100S100G05
				G24 Push-pull 10...30 V U_B = 10 ... 30 V DC	**087739** HKC100S100G24

Technical data

Parameter		Value			Unit
Pulses per revolution		2 x 25 or 2 x 100			
Detent positions		100			
Housing material		Plastic/metal			
Weight		0.25			kg
Detent mechanism		Magnetic			
Shaft loading, axial, max.		25			N
Shaft loading, radial, max.		40			N
Mechanical life, min.		5 x 10^6			Rev.
Operating temperature		0 ... +50			°C
Storage temperature		-20 ... +50			°C
Atmospheric humidity, max.		80% (condensation not permissible)			
Front degree of protection	acc. to EN 60529/IEC 529	IP 65			
	acc. to NEMA 250	250-12			
Resistance to vibration Vibrations (3 axes) Shock (3 axes)		 DIN/IEC 68-2-6 DIN/IEC 68-2-27			
EMC protection requirements in accordance with CE		EN 61000-6-2, EN 61000-6-4			
Output circuit RS422A					
Output stage		**A05**			
Output signals		A, /A, B, /B			
Operating voltage U_B		5 ± 5 %			V DC
Operating current, no load, max.		80			mA
Output circuit		According to RS422A, use RS422 differential receiver module			
Output signals cw (clockwise rotation)		25 pulses 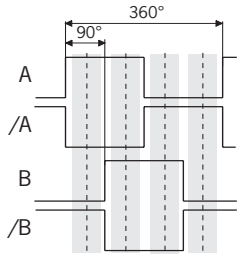 		100 pulses 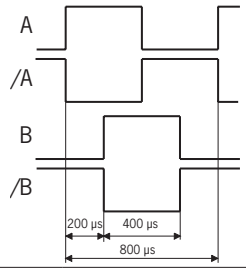 	
Terminal assignment		Screw terminal S 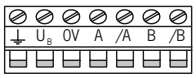 			
Output circuit, push-pull					
Output stage		**G05**	**G12**	**G24**	
Output signals		A, B			
Operating voltage U_B		5 ± 5 %	10 ... 30		V DC
Operating current, no load, max.		80			mA
Output voltage	HIGH (1), min.	4.0 V / 0 mA	4.9 V / 0 mA	–	
		3.4 V / 5 mA	3.9 V / 5 mA	–	
		3.0 V / 20 mA	3.6 V / 20 mA	U_B - 3 V / 20 mA	
	LOW (0), max.	1.3 V / 15 mA	1.3 V / 15 mA	3 V / 20 mA	
Output current per output, max.		20			mA
Output signals cw (clockwise rotation)		25 pulses 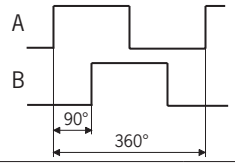 		100 pulses 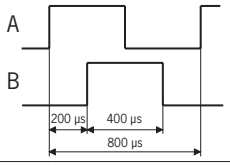 	
Terminal assignment		Screw terminal S 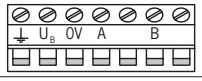 			

Handwheel HKD

- **100 detent positions per revolution**
- **Wear-free magnetic detent mechanism**
- **100 or 25 pulses per revolution**
- **Installation in operator panels and EUCHNER hand-held pendant stations HBL**

Notes

- Output A05 suitable for Siemens control systems with RS422 input
- Output G05 suitable for Fanuc control systems
- Dial: see accessories page 72
- Front panel: see accessories page 72

Mounting depth l

Connection	l [mm]
Screw terminal S	55
Ribbon cable, 6-pin V	53

Dimension drawing

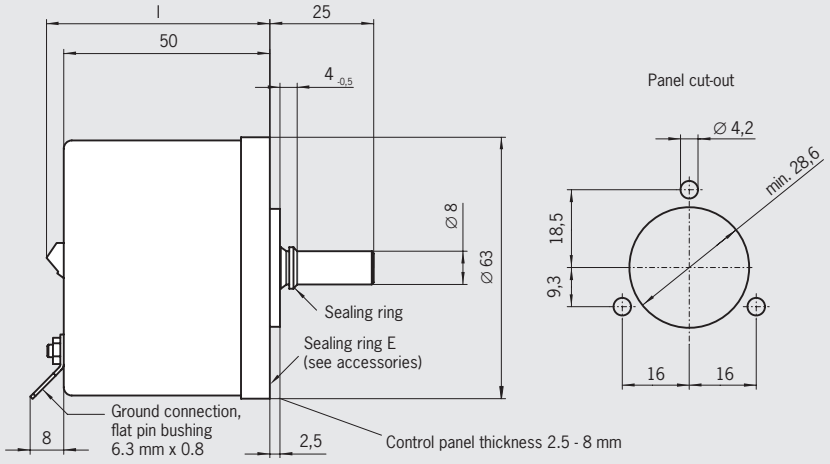

Ordering table

Series	Number of pulses per revolution	Connection	Detent positions	Outputs	Order No./item
HKD	25	S Screw terminal	100	G12 Push-pull 5 V U_B = 10 ... 30 V DC	091525 HKD025S100G12
	100	S Screw terminal	100	A05 RS422A U_B = 5 V DC	054866 HKD100S100A05
				G05 Push-pull 5 V U_B = 5 V DC	083354 HKD100S100G05
				G24 Push-pull 10...30 V U_B = 10 ... 30 V DC	054868 HKD100S100G24
		V Ribbon cable 6-pin with plug	100	A05 RS422A U_B = 5 V DC	057036 HKD100V100A05
				G05 Push-pull 5 V U_B = 5 V DC	091527 HKD100V100G05
				G24 Push-pull 10...30 V U_B = 10 ... 30 V DC	057037 HKD100V100G24

Technical data

Parameter		Value			Unit
Pulses per revolution		2 x 25 or 2 x 100			
Detent positions		100			
Housing material		Aluminum			
Weight		0.5			kg
Detent mechanism		Magnetic			
Shaft loading, axial, max.		25			N
Shaft loading, radial, max.		40			N
Mechanical life, min.		20 x 10^6			Rev.
Operating temperature		0 ... +70			°C
Storage temperature		-25 ... +85			°C
Atmospheric humidity, max.		80% (condensation not permissible)			
Front degree of protection	acc. to EN 60529/IEC 529	IP 65			
	acc. to NEMA 250	250-12			
Resistance to vibration Vibrations (3 axes) Shock (3 axes)		 DIN/IEC 68-2-6 DIN/IEC 68-2-27			
EMC protection requirements in accordance with CE		EN 61000-6-2, EN 61000-6-4			
Output circuit RS422A					
Output stage		**A05**			
Output signals		A, /A, B, /B			
Operating voltage U_B		5 ± 5 %			V DC
Operating current, no load, max.		80			mA
Output circuit		According to RS422A, use RS422 differential receiver module			
Output signals cw (clockwise rotation)		25 pulses 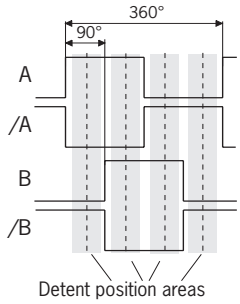 		100 pulses 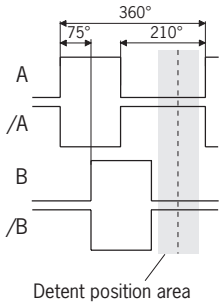 	
Terminal assignment		Ribbon cable V 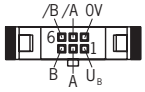 		Screw terminal S 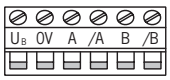 	
Output circuit, push-pull					
Output stage		**G05**	**G12**	**G24**	
Output signals		A, B			
Operating voltage U_B		5 ± 5 %	10 ... 30		V DC
Operating current, no load, max.		80			mA
Output voltage	HIGH (1), min.	4.0 V / 0 mA	4.9 V / 0 mA	–	
		3.4 V / 5 mA	3.9 V / 5 mA	–	
		3.0 V / 20 mA	3.6 V / 20 mA	U_B - 3 V / 20 mA	
	LOW (0), max.	1.3 V / 15 mA	1.3 V / 15 mA	3 V / 20 mA	
Output current per output, max.		20			mA
Output signals cw (clockwise rotation)		25 pulses 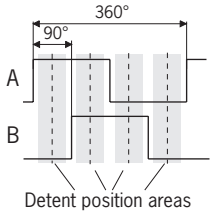 		100 pulses 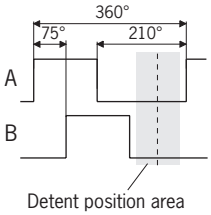 	
Terminal assignment		Ribbon cable V 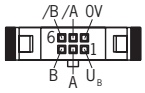 		Screw terminal S 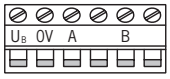 	

Handwheel HWA

- **100 detent positions per revolution**
- **Mechanical detent mechanism**
- **100 or 25 pulses per revolution**
- **Center point fixing**

Dimension drawing

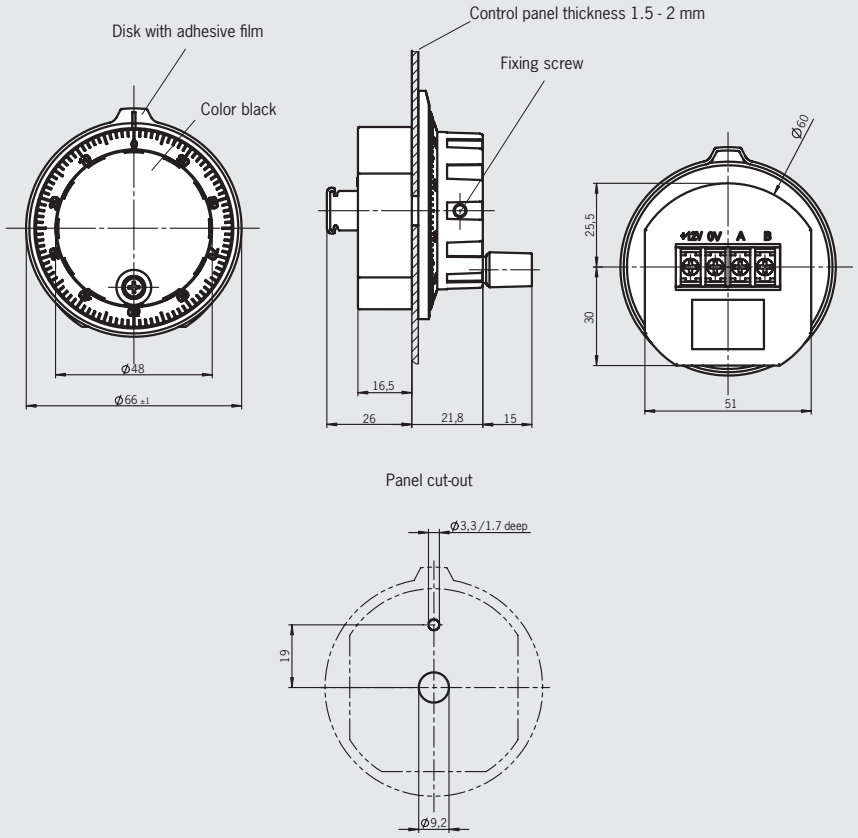

Notes

- Output A05 suitable for Siemens control systems with RS422 input
- Output G05 suitable for Fanuc control systems
- Packaging unit 10 pieces

Ordering table

Series	Number of pulses per revolution	Connection	Detent positions	Outputs	Order No./item
HWA Packaging unit 10 ea.	**25**	**T** Screw terminal	**100**	**G12** Push-pull 5 V U_B = 12 V DC	**072972** HWA025T100G12/V10 (10 ea.)
	100	**T** Screw terminal	**100**	**A05** RS422A U_B = 5 V DC	**072970** HWA100T100A05/V10 (10 ea.)
				G05 Push-pull 5 V U_B = 5 V DC	**072971** HWA100T100G05/V10 (10 ea.)

Technical data

Parameter		Value		Unit
Pulses per revolution		2 x 25 or 2 x 100		
Detent positions		100		
Housing material		Plastic/metal		
Weight		0.1		kg
Detent mechanism		Mechanical		
Shaft loading, axial, max.		25		N
Shaft loading, radial, max.		40		N
Mechanical life, min.		1×10^6		Rev.
Operating temperature		0 ... +50		°C
Storage temperature		-20 ... +50		°C
Atmospheric humidity, max.		80% (condensation not permissible)		
Front degree of protection	acc. to EN 60529/IEC 529	IP65		
	acc. to NEMA 250	250-12		
Output circuit RS422A				
Output stage		**A05**		
Output signals		A, /A, B, /B		
Operating voltage U_B		5 ± 10 %		V DC
Operating current, no load, max.		80		mA
Output specifications		According to RS422A, use RS422 differential receiver module		
Output signals cw (clockwise rotation)		100 pulses 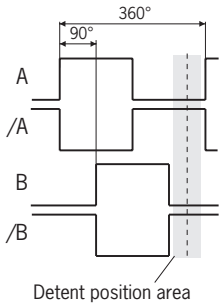		
Terminal assignment		Screw terminal T 		
Output circuit, push-pull				
Output stage		**G05**	**G12**	
Output signals		A, B		
Operating voltage U_B		5 ± 10 %	12 ± 10 %	V DC
Operating current, no load, max.		20		mA
Output voltage	HIGH (1), min.	4.0 V / 20 mA		
	LOW (0), max.	0.5 V / 20 mA		
Output current per output, max.		20		mA
Output signals CW (clockwise rotation)		100 pulses 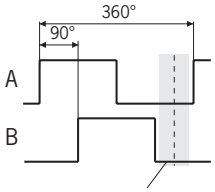	25 pulses 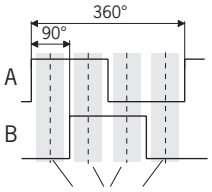	
Terminal assignment		Screw terminal T 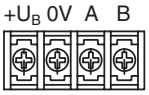		

Handwheel HWB

- **100 detent positions per revolution**
- **Mechanical detent mechanism**
- **100 or 25 pulses per revolution**
- **3-point fixing**

Dimension drawing

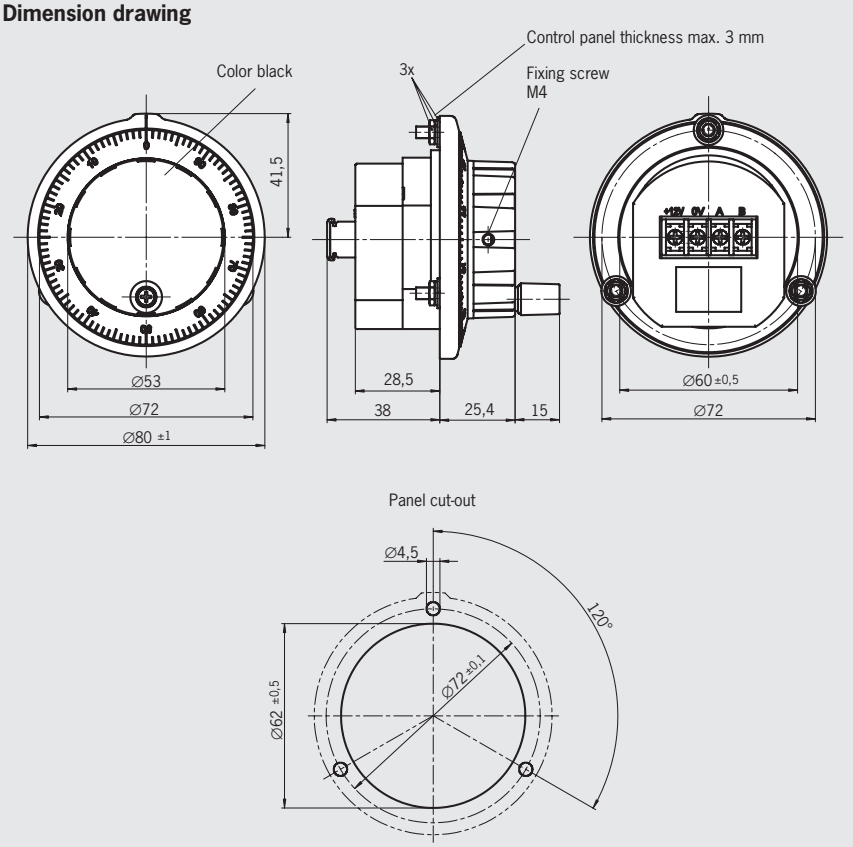

Notes

- Output A05 suitable for Siemens control systems with RS422 input
- Output G05 suitable for Fanuc control systems

Ordering table

Series	Number of pulses per revolution	Connection	Detent positions	Outputs	Order No./item
HWB Packaging unit 5 ea.	**25**	**T** Screw terminal	**100**	**G12** Push-pull 5 V U_B = 12 V DC	**072975** HWB025T100G12/V05 (5 ea.)
	100	**T** Screw terminal	**100**	**A05** RS422A U_B = 5 V DC	**072973** HWB10T100A05/V05 (5 ea.)
				G05 Push-pull 5 V U_B = 5 V DC	**072974** HWB100T100G05/V05 (5 ea.)

Technical data

Parameter		Value		Unit
Pulses per revolution		2 x 25 or 2 x 100		
Detent positions		100		
Housing material		Plastic/metal		
Weight		0.125		kg
Detent mechanism		Mechanical		
Shaft loading, axial, max.		25		N
Shaft loading, radial, max.		40		N
Mechanical life, min.		1 x 10^6		Rev.
Operating temperature		0 ... +50		°C
Storage temperature		-20 ... +50		°C
Atmospheric humidity, max.		80% (condensation not permissible)		
Front degree of protection	acc. to EN 60529/IEC 529	IP65		
	acc. to NEMA 250	250-12		
Output circuit RS422A				
Output stage		**A05**		
Output signals		A, /A, B, /B		
Operating voltage U_B		5 ± 10 %		V DC
Operating current, no load, max.		80		mA
Output specifications		According to RS422A, use RS422 differential receiver module		
Output signals cw (clockwise rotation)		100 pulses 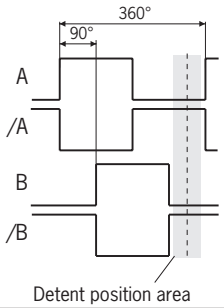		
Terminal assignment		Screw terminal T 		
Output circuit, push-pull				
Output stage		**G05**	**G12**	
Output signals		A, B		
Operating voltage U_B		5 ± 10 %	12 ± 10 %	V DC
Operating current, no load, max.		20		mA
Output voltage	HIGH (1), min.	4.0 V / 20 mA		
	LOW (0), max.	0.5 V / 20 mA		
Output current per output, max.		20		mA
Output signals CW (clockwise rotation)		100 pulses 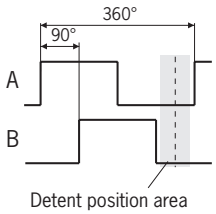	25 pulses 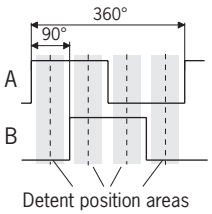	
Terminal assignment		Screw terminal T 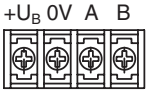		

Accessories

Front panel for handwheel HKB

- Front panel with bonded seal

Ordering table

Item	Order no.
Front panel for handwheel HKB with dial 100914, anodized silver	**105072**
Front panel for handwheel HKB with dial 100914, anodized black	**105073**

Dimension drawing

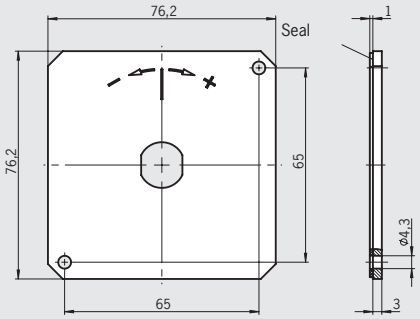

Front panel for handwheel HKD

- Front panel with bonded seal
- Seal handwheels without front panel with sealing ring E

Dimensions

Design	e	f	g	h	k	m	n	p	s	r
F	110	110	90	90	-	-	DIN74-Am5	-	-	R48
G	108	108	89	89	-	-	5.2	-	-	R48
M	76.2	76.2	-	-	65	65	4.2	-	-	R35.5

Ordering table

Item	Order no.
Sealing ring E	**054861**
Front panel F with seal	**028760**
Front panel G with seal	**028761**
Front panel M with seal	**041758**

Dimension drawing

Front panel F, G, M

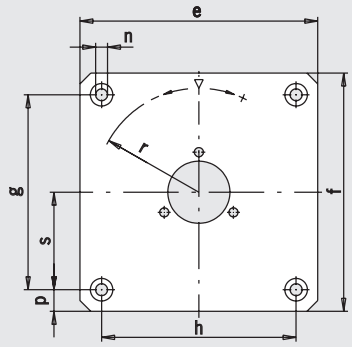

Dials for handwheel HKB

Ordering table

Item	Order no.
Dial 58 mm silver, metal with crank [1]	**100914**
Dial 66.5 mm silver, metal with finger recess [1] [2]	**111992**
Dial 66.5 mm black, plastic with finger recess [2]	**105961**

1) Suitable for installation in operator panels

2) For use of handwheel HKB in the kits for hand-held pendant stations HBA and HBM

Dimension drawing

Dial 58 mm silver, 100914

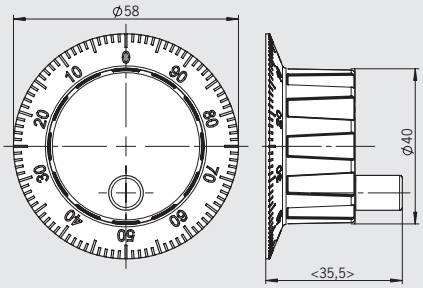

Dial 66.5 mm silver, 111992

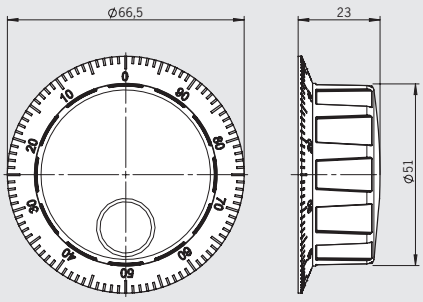

Dial 66.5 mm black, 105961

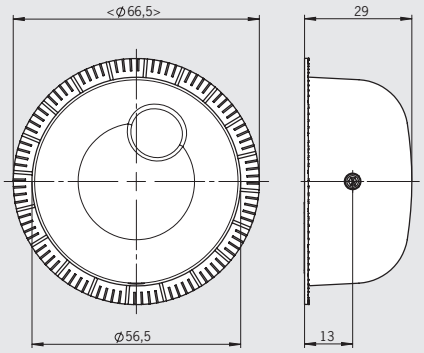

Dials for handwheel HKD

Dimensions

Design	∅ a	∅ b	c
Dial 90 mm	90	63	41
Dial 78 mm	78	63	39
Dial 75 mm	75	63	39
Dial 65 mm	65	44	42
Dial 58 mm	58	44	40

Ordering table

Item	Order no.
Dial 90 mm black	**057266**
Dial 90 mm silver	**057268**
Dial 78 mm black	**057280**
Dial 78 mm silver	**057272**
Dial 75 mm silver	**072597**
Dial 65 mm black, for HBL kit	**057318**
Dial 65 mm silver, for HBL kit	**057314**
Dial 58 mm black	**059276**

Dimension drawing

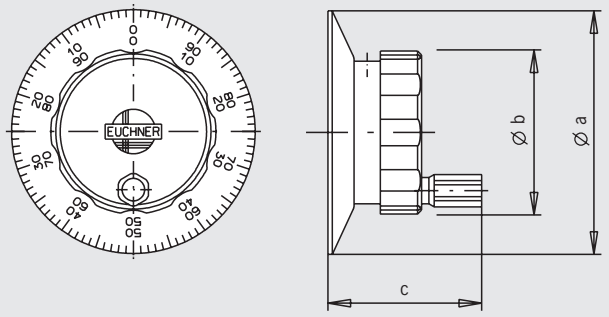

Dimension drawing – HBA housing top shell

▶ **HBA top shell with handwheel**

Dimension drawing

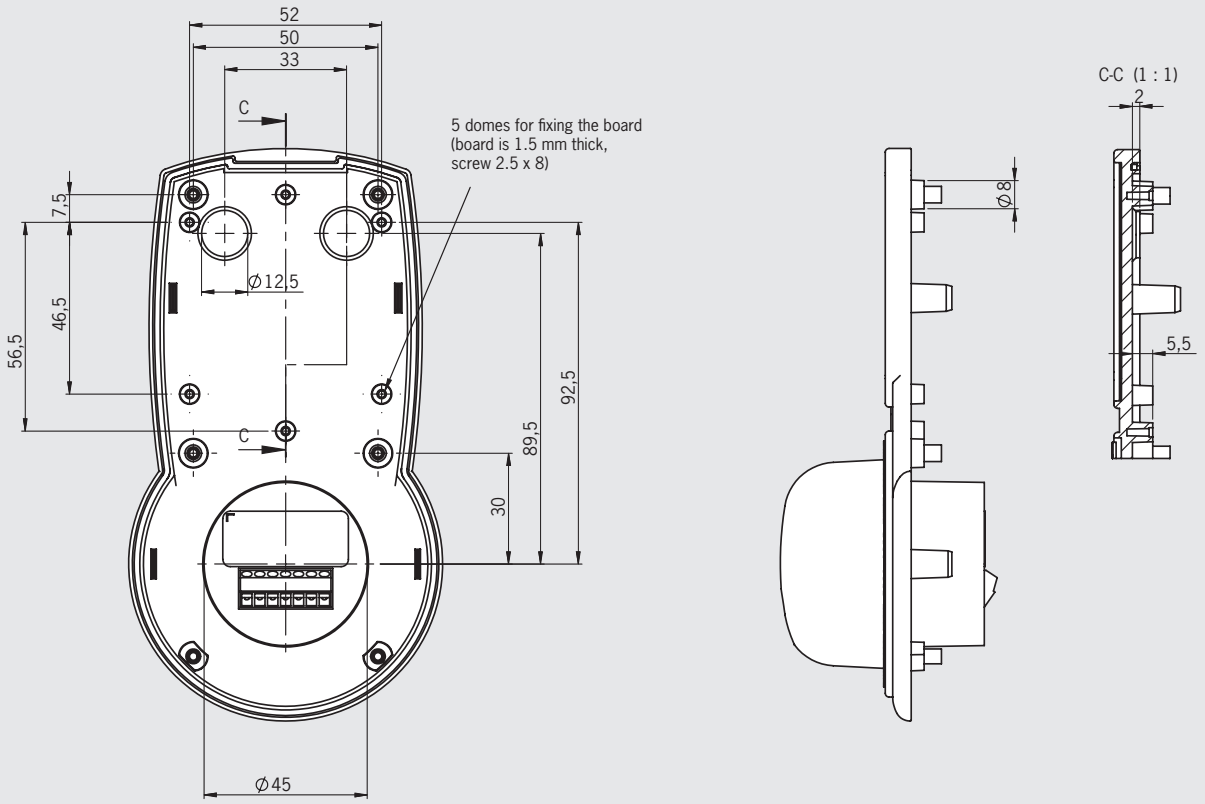

▶ **HBA top shell without handwheel**

Dimension drawing

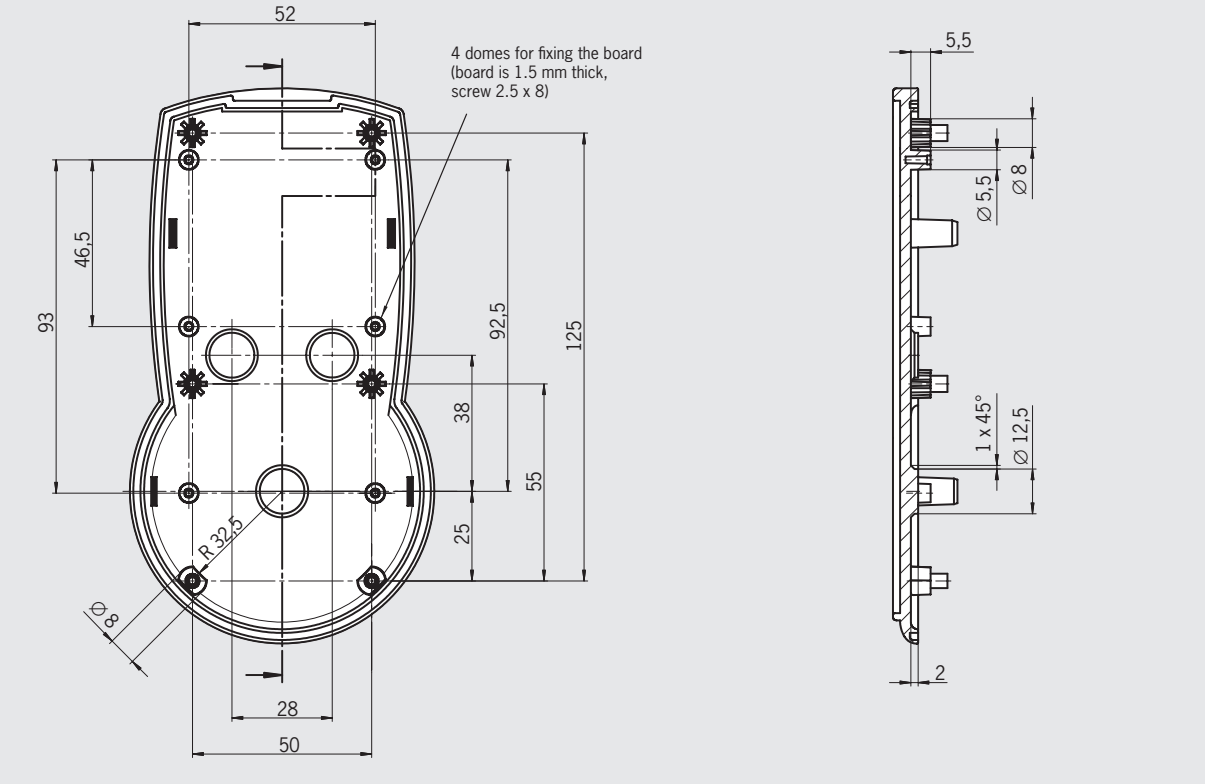

Dimension drawing – HBM housing top shell

- **HBM top shell with and without handwheel**

Dimension drawing

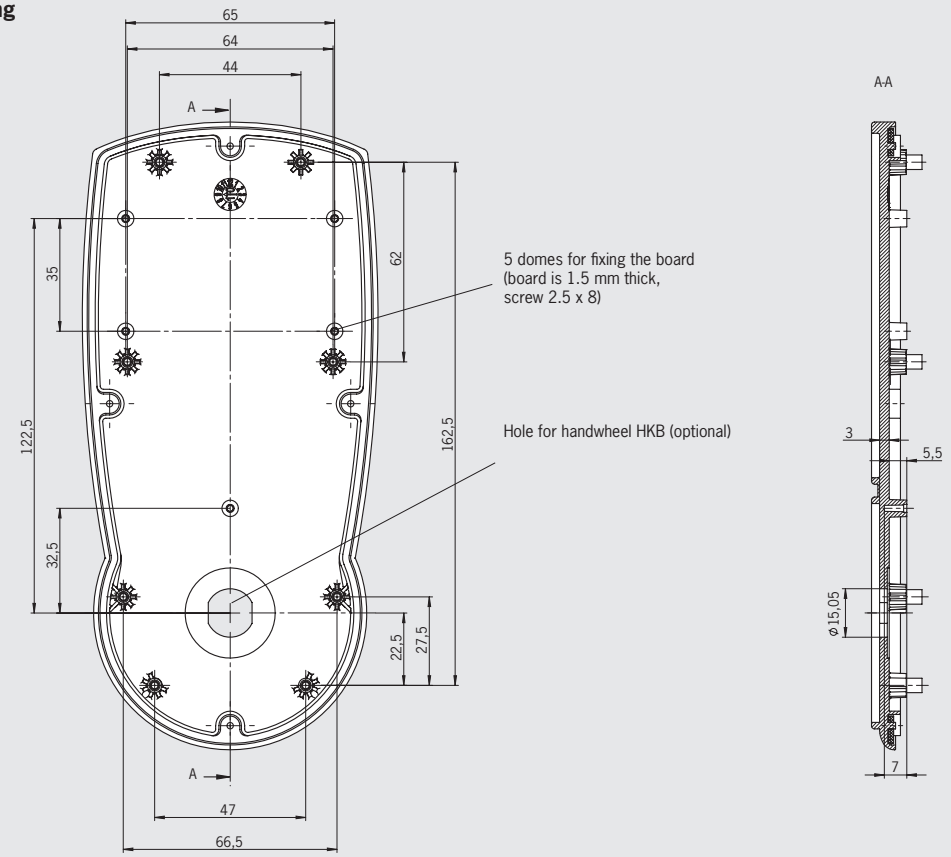

Assembly drawings

Housings HBL-073109 and HBL-072632

- Mounting enabling switch ZSE2-2 C1692 (2 NO contacts, 1 positively driven contact)
- No hole for EMERGENCY STOP device

Dimension drawing

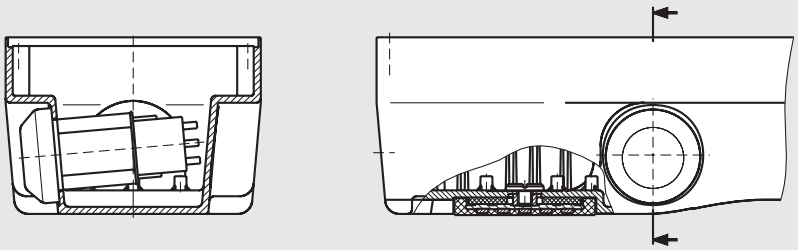

Housings HBL-072983 and HBL-083484

- Mounting enabling switch ZSE2-4 C1943 (2 NO contacts, 2 positively driven contacts)
- Mounting EMERGENCY STOP device 073985

Dimension drawing

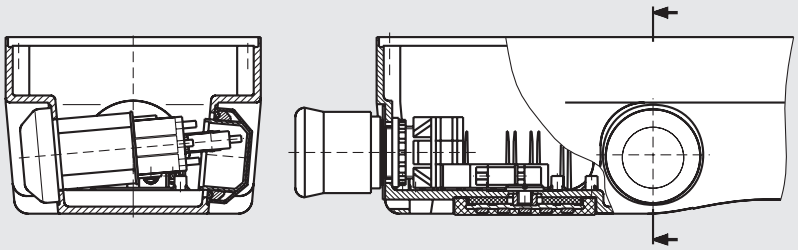

Request form for hand-held pendant stations HBA without handwheels

Customer			
Company		Telephone	
Address		Fax	
		E-mail	
Name		Department	
First name		Date	

Housing
- ☐ **Gray**
- ☐ Black

Front foil
- ☐ **EUCHNER Standard**
- ☐ Customer-specific as per attachment

Pushbuttons
- ☐ **Without**
- ☐ 3 membrane buttons
- ☐ ____ single button

LED
- ☐ **Without**
- ☐ With

Key-operated switch
- ☐ **Without**
- ☐ With

Toggle switch
- ☐ **Without**
- ☐ With: _____

Joystick
- ☐ **Without**
- ☐ With KE

Cable
- ☐ **Coiled 1.5 m, can be streched to 3.5 m**
- ☐ Coiled 2.0 m, can be streched to 5.0 m
- ☐ Straight: ____ m

Plug connector
- ☐ **Burndy metal**
- ☐ Coninvers metal
- ☐ Other: _____
- ☐ Without plug connector

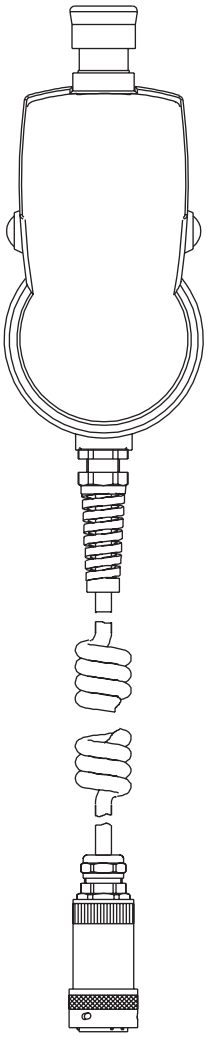

EMERGENCY STOP
- ☐ **2 NC contacts**

Selector switch left
- ☐ **Without**
- ☐ ____ positions Gray code
- ☐ ____ positions 1 of X
- ☐ Labeling: _____

Selector switch right
- ☐ **Without**
- ☐ ____ positions Gray code
- ☐ ____ positions 1 of X
- ☐ Labeling: _____

Enabling device
- ☐ **Without**
- ☐ 2-stage, each 1 NO, right and left
- ☐ 3-stage, 2 NO, left

Further components and versions on request

Special requirements

Quotation					
Quantity		One-off project requirement		Series production requirement per year	
Delivery date requested		Week			

Date	Signature

Request form for hand-held pendant stations HBA with handwheels

Customer			
Company		**Telephone**	
Address		**Fax**	
		E-mail	
Name		**Department**	
First name		**Date**	

Housing
- ☐ **Gray**
- ☐ Black

Front foil
- ☐ **EUCHNER Standard**
- ☐ Customer-specific as per attachment

Pushbuttons
- ☐ **Without**
- ☐ 3 membrane buttons
- ☐ ____ single button

LED
- ☐ **Without**
- ☐ With

Key-operated switch
- ☐ **Without**
- ☐ With

Toggle switch
- ☐ **Without**
- ☐ With: _____

Joystick
- ☐ **Without**
- ☐ With KE

Cable
- ☐ **Coiled 1.5 m, can be streched to 3.5 m**
- ☐ Coiled 2.0 m, can be streched to 5.0 m
- ☐ Straight: ____ m

Plug connector
- ☐ **Burndy metal**
- ☐ Coninvers metal
- ☐ Other: _____
- ☐ Without plug connector

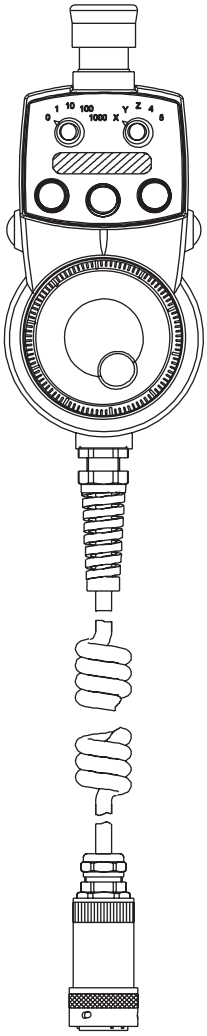

EMERGENCY STOP
- ☐ **2 NC contacts**

Selector switch left
- ☐ **Without**
- ☐ ____ positions Gray code
- ☐ ____ positions 1 of X
- ☐ Labeling: _____

Selector switch right
- ☐ **Without**
- ☐ ____ positions Gray code
- ☐ ____ positions 1 of X
- ☐ Labeling: _____

Enabling device
- ☐ **Without**
- ☐ 2-stage, each 1 NO, right and left
- ☐ 3-stage, 2 NO, left

Handwheel
See catalogue page 33
- ☐ Without
- ☐ magnetic
- ☐ mechanical
- ☐ A05, 100 pulses, RS422
- ☐ G05, 100 pulses
- ☐ G12, 25 pulses
- ☐ G24, 100 pulses

On which control system will the handwheel be operated?
- ☐ Siemens, type: _____
- ☐ Fanuc, type: _____
- ☐ Mitsubishi, type: _____
- ☐ Other / brand: _____

Further components and versions on request

Special requirements

Quotation					
Quantity		One-off project requirement		Series production requirement per year	
Delivery date requested		Week			

Date	Signature

Request form for hand-held pendant stations HBM without handwheels

Customer			
Company		**Telephone**	
Address		**Fax**	
		E-mail	
Name		**Department**	
First name		**Date**	

Front foil
- ☐ **EUCHNER Standard**
- ☐ Customer-specific as per attachment

Pushbuttons
- ☐ **Without**
- ☐ 3 membrane buttons
- ☐ ____ single button

LED
- ☐ **Without**
- ☐ With

Key-operated switch
- ☐ **Without**
- ☐ With

Toggle switch
- ☐ **Without**
- ☐ With: _____

Joystick
- ☐ **Without**
- ☐ With KE

Cable
- ☐ **Coiled 1.5 m, can be streched to 3.5 m**
- ☐ Coiled 2.0 m, can be streched to 5.0 m
- ☐ Straight: ____ m

Plug connector
- ☐ **Burndy metal**
- ☐ Coninvers metal
- ☐ Other: _____
- ☐ Without plug connector

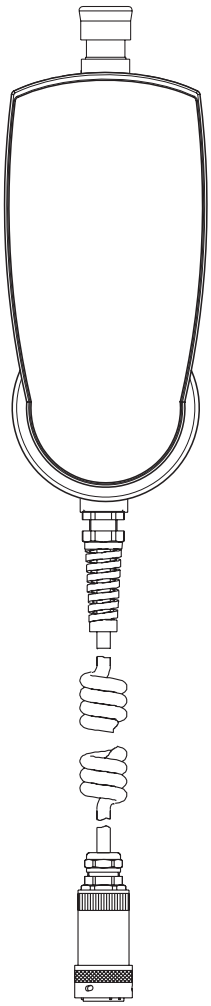

EMERGENCY STOP
- ☐ **2 NC contacts**

Selector switch left
- ☐ **Without**
- ☐ ____ positions Gray code
- ☐ ____ positions 1 of X
- ☐ Labeling: _____

Selector switch right
- ☐ **Without**
- ☐ ____ positions Gray code
- ☐ ____ positions 1 of X
- ☐ Labeling: _____

Enabling device
- ☐ **Without**
- ☐ 2-stage, each 1 NO, right and left
- ☐ 3-stage, 2 NO, left

Further components and versions on request

Special requirements

Quotation					
Quantity	☐	One-off project requirement	☐	Series production requirement per year	☐
Delivery date requested	☐	Week	☐		

Date	Signature

Request form for hand-held pendant stations HBM with handwheels

Customer			
Company		**Telephone**	
Address		**Fax**	
		E-mail	
Name		**Department**	
First name		**Date**	

Front foil
- ☐ **EUCHNER Standard**
- ☐ Customer-specific as per attachment

Pushbuttons
- ☐ **Without**
- ☐ 3 membrane buttons
- ☐ ____ single button

LED
- ☐ **Without**
- ☐ With

Key-operated switch
- ☐ **Without**
- ☐ With

Toggle switch
- ☐ **Without**
- ☐ With: _____

Joystick
- ☐ **Without**
- ☐ With KE

Cable
- ☐ **Coiled 1.5 m, can be streched to 3.5 m**
- ☐ Coiled 2.0 m, can be streched to 5.0 m
- ☐ Straight: ____ m

Plug connector
- ☐ **Burndy metal**
- ☐ Coninvers metal
- ☐ Other: _____
- ☐ Without plug connector

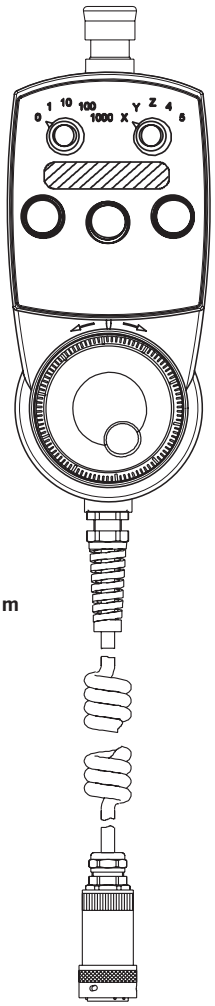

EMERGENCY STOP
- ☐ **2 NC contacts**

Selector switch left
- ☐ **Without**
- ☐ ____ positions Gray code
- ☐ ____ positions 1 of X
- ☐ Labeling: _____

Selector switch right
- ☐ **Without**
- ☐ ____ positions Gray code
- ☐ ____ positions 1 of X
- ☐ Labeling: _____

Enabling device
- ☐ **Without**
- ☐ 2-stage, each 1 NO, right and left
- ☐ 3-stage, 2 NO, left

Handwheel
See catalogue page 33
- ☐ Without
- ☐ magnetic
- ☐ mechanical
- ☐ A05, 100 pulses, RS422
- ☐ G05, 100 pulses
- ☐ G12, 25 pulses
- ☐ G24, 100 pulses

On which control system will the handwheel be operated?
- ☐ Siemens, type: _____
- ☐ Fanuc, type: _____
- ☐ Mitsubishi, type: _____
- ☐ Other / brand: _____

Further components and versions on request

Special requirements

Quotation					
Quantity	☐	One-off project requirement	☐	Series production requirement per year	☐
Delivery date requested	☐	Week	☐		

Date	Signature

Hand-held pendant stations HBL request form

Customer			
Company		**Telephone**	
Address		**Fax**	
		E-mail	
Name		**Department**	
First name		**Date**	

Front plate
- ☐ **EUCHNER Standard black anodized silver labeling**
- ☐ Customer-specific as per attachment

Logo
- ☐ **Without**
- ☐ Customer-specific as per attachment

Pushbutton
- ☐ **Without**
- ☐ Number of NO contacts
- ☐ Number of NC contacts
- ☐ **Not illuminated**
- ☐ Illuminated
- ☐ Symbol plate labeling as per attachment
- ☐ Front plate labeling as per attachment

Key-operated switch
- ☐ **Without**
- ☐ With

Lamp/LED
- ☐ **Without**
- ☐ Customer-specific as per attachment

Potentiometer
- ☐ **Without**
- ☐ Technical specification: _____

Cable
- ☐ **Coiled 1.5 m, can be streched to 35 m**
- ☐ Coiled 2.0 m, can be streched to 5.0 m
- ☐ Straight: _____ m

Plug connector
- ☐ **Burndy metal**
- ☐ Coninvers metal
- ☐ Other: _____
- ☐ Without plug connector

Further components and versions on request

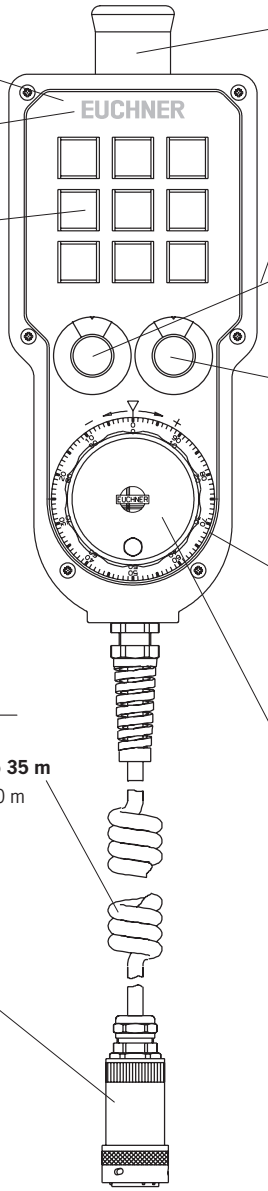

EMERGENCY STOP
- ☐ **2 NC contacts**
- ☐ 1 NC contacts
- ☐ **Without**

Enabling device
- ☐ **2-tage, ZSG, each 1 NO, right + left**
- ☐ 3-stage, ZSE 2-2 (2 NO + 1 NC) only left
- ☐ 3-stage, ZSE 2-4 (2 NO + 2 NC) only left
- ☐ Without enabling device

Selector switch left
- ☐ **Without**
- ☐ ____ Positions Gray code
- ☐ ____ Positions 1 of X
- ☐ Labeling: _____

Selector switch right
- ☐ **Without**
- ☐ ____ Positions Gray code
- ☐ ____ Positions 1 of X
- ☐ Labeling: _____

Labeling selector switches
- ☐ **Through scale wheels**
- ☐ On front plate

Handwheel
see catalogue page 60 - 72
- ☐ without
- ☐ Magnetic
- ☐ Mechanical
- ☐ A05, 100 pulses, RS422
- ☐ G05, 100 pulses
- ☐ G12, 25 pulses
- ☐ G24, 100 pulses

Dial
- ☐ **EUCHNER Logo**
- ☐ Customer-specific logo as per attachment
- ☐ **Silver 65 mm**
- ☐ Black 65 mm
- ☐ Silver 75 mm
- ☐ Black 75 mm

On which control system will the handwheel be operated?
- ☐ Siemens, type: _____
- ☐ Fanuc, type: _____
- ☐ Mitsubishi, type: _____
- ☐ Other / brand: _____

Special requirements

Quotation					
Quantity		One-off project requirement		Series production requirement per year	
Delivery date requested		Week			

Date	Signature

Index by item designation

Index by order number

Representatives

International

Austria
EUCHNER GmbH
Aumühlweg 17-19/Halle 1C
2544 Leobersdorf
Tel. +43 720 010 200
Fax +43 720 010 200-20
info@euchner.at

Benelux
EUCHNER (BENELUX) BV
Visschersbuurt 23
3356 AE Papendrecht
Tel. +31 78 615-4766
Fax +31 78 615-4311
info@euchner.nl

Brazil
EUCHNER Com.Comp.
Eletronicos Ltda.
Av. Prof. Luiz Ignácio Anhaia Mello,
no. 4387
Vila Graciosa
São Paulo - SP - Brasil
CEP 03295-000
Tel. +55 11 29182200
Fax +55 11 23010613
euchner@euchner.com.br

Canada
EUCHNER Canada Inc.
2105 Fasan Drive
Oldcastle, ON N0R 1L0
Tel. +1 519 800-8397
Fax +1 519 737-0314
sales@euchner.ca

China
EUCHNER (Shanghai)
Trading Co., Ltd.
No. 15 building,
No. 68 Zhongchuang Road,
Songjiang
Shanghai, 201613, P.R.C
Tel. +86 21 5774-7090
Fax +86 21 5774-7599
info@euchner.com.cn

Czech Republic
EUCHNER electric s.r.o.
Trnkova 3069/117h
628 00 Brno
Tel. +420 533 443-150
Fax +420 533 443-153
info@euchner.cz

Denmark
Duelco A/S
Systemvej 8 - 10
9200 Aalborg SV
Tel. +45 7010 1007
Fax +45 7010 1008
info@duelco.dk

Estonia
Sähkölehto OÜ
Hobujaama 4
Tallinn 10151
Tel. +372 56 645 400
office@sahkolehto.fi

Finland
Sähkölehto Oy
Holkkitie 14
00880 Helsinki
Tel. +358 9 7746420
office@sahkolehto.fi

France
EUCHNER France S.A.R.L.
Parc d'Affaires des Bellevues
Allée Rosa Luxembourg
Bâtiment le Colorado
95610 ERAGNY sur OISE
Tel. +33 1 3909-9090
Fax +33 1 3909-9099
info@euchner.fr

Hungary
EUCHNER Magyarország Kft.
FSD Park 2.
2045 Törökbálint
Tel. +36 1 919 0855
Fax +36 1 919 0857
info@euchner.hu

India
EUCHNER (India) Pvt. Ltd.
401, Bremen Business Center,
City Survey No. 2562,
University Road
Aundh, Pune - 411007
Tel. +91 20 64016384
Fax +91 20 25885148
info@euchner.in

Israel
Ilan & Gavish Automation Service Ltd.
26 Shenkar St. Qiryat Arie 49513
P.O. Box 10118
Petach Tikva 49001
Tel. +972 3 9221824
Fax +972 3 9240761
mail@ilan-gavish.com

Italy
TRITECNICA SpA
Viale Lazio 26
20135 Milano
Tel. +39 02 541941
Fax +39 02 55010474
info@tritecnica.it

Japan
EUCHNER Co., Ltd.
1269-1 Komakiharashinden,
Komaki-shi, Aichi-ken
485-0012, Japan
Tel. +81 568 74 5237
Fax +81 568 74 5238
info@euchner.jp

Korea
EUCHNER Korea Co., Ltd.
115 Gasan Digital 2 - Ro
(Gasan-dong, Daeryung
Technotown 3rd Rm 810)
153 - 803 Kumchon-Gu, Seoul
Tel. +82 2 2107-3500
Fax +82 2 2107-3999
info@euchner.co.kr

Mexico
EUCHNER México S de RL de CV
Conjunto Industrial PK Co.
Carretera Estatal 431 km. 1+300
Ejido El Colorado, El Marqués
76246 Querétaro, México
Tel. +52 442 402 1485
Fax +52 442 402 1486
info@euchner.mx

Poland
EUCHNER Sp. z o.o.
Krasińskiego 29
40-019 Katowice
Tel. +48 32 252 20 15
Fax +48 32 252 20 13
info@euchner.pl

Portugal
PAM Servicos Tecnicos Industriais Lda.
Rua de Timor - Pavilhao 2A
Zona Industrial da Abelheira
4785-123 Trofa
Tel. +351 252 418431
Fax +351 252 494739
pam@mail.telepac.pt

Republic of South Africa
RUBICON
ELECTRICAL DISTRIBUTORS
4 Reith Street, Sidwell
6061 Port Elizabeth
Tel. +27 41 451-4359
Fax +27 41 451-1296
sales@rubiconelectrical.com

Romania
First Electric SRL
Str. Ritmului Nr. 1 Bis
Ap. 2, Sector 2
021675 Bucuresti
Tel. +40 21 2526218
Fax +40 21 3113193
office@firstelectric.ro

Singapore
BM Safety Singapore Pte Ltd.
3 Ang Mo Kio Industrial Park 2A
#07-04 Ang Mo Kio Tech 1
Singapore 568050
Tel. +65 6483 9288
Fax +65 6235 0506
sales@bmsafety.com.sg

Slovakia
EUCHNER electric s.r.o.
Trnkova 3069/117h
628 00 Brno
Tel. +420 533 443-150
Fax +420 533 443-153
info@euchner.cz

Slovenia
SMM proizvodni sistemi d.o.o.
Jaskova 18
2000 Maribor
Tel. +386 2 4502326
Fax +386 2 4625160
franc.kit@smm.si

Spain
EUCHNER, S.L.
Gurutzegi 12 - Local 1
Polígono Belartza
20018 San Sebastian
Tel. +34 943 316-760
Fax +34 943 316-405
info@euchner.es

Sweden
Censit AB
Box 331
33123 Värnamo
Tel. +46 370 691010
Fax +46 370 18888
info@censit.se

Switzerland
EUCHNER AG
Falknisstrasse 9a
7320 Sargans
Tel. +41 81 720-4590
Fax +41 81 720-4599
info@euchner.ch

Taiwan
Daybreak Int'l (Taiwan) Corp.
3F, No. 124, Chung-Cheng Road
Shihlin 11145, Taipei
Tel. +886 2 8866-1234
Fax +886 2 8866-1239
day111@ms23.hinet.net

Turkey
EUCHNER Endüstriyel Emniyet
Teknolojileri Ltd. Şti.
Hattat Bahattin Sok.
Ceylan Apt. No. 13/A
Göztepe Mah.
34730 Kadıköy / Istanbul
Tel. +90 216 359-5656
Fax +90 216 359-5660
info@euchner.com.tr

United Kingdom
EUCHNER (UK) Ltd.
Unit 2 Petre Drive,
Sheffield
South Yorkshire
S4 7PZ
Tel. +44 114 2560123
Fax +44 114 2425333
sales@euchner.co.uk

USA
EUCHNER USA Inc.
6723 Lyons Street
East Syracuse, NY 13057
Tel. +1 315 701-0315
Fax +1 315 701-0319
info@euchner-usa.com

EUCHNER USA Inc.
Detroit Office
130 Hampton Circle
Rochester Hills, MI 48307
Tel. +1 248 537-1092
Fax +1 248 537-1095
info@euchner-usa.com

Germany

Augsburg
EUCHNER GmbH + Co. KG
Ingenieur- und Vertriebsbüro
Julius-Spokojny-Weg 8
86153 Augsburg
Tel. +49 821 56786540
Fax +49 821 56786541
peter.klopfer@euchner.de

Berlin
EUCHNER GmbH + Co. KG
Ingenieur- und Vertriebsbüro
Ulmenstraße 115a
12621 Berlin
Tel. +49 30 50508214
Fax +49 30 56582139
alexander.walz@euchner.de

Chemnitz
EUCHNER GmbH + Co. KG
Ingenieur- und Vertriebsbüro
Am Vogelherd 2
09627 Bobritzsch-Hilbersdorf
Tel. +49 37325 906000
Fax +49 37325 906004
jens.zehrtner@euchner.de

Düsseldorf
EUCHNER GmbH + Co. KG
Ingenieur- und Vertriebsbüro
Tippgarten 3
59427 Unna
Tel. +49 2308 9337284
Fax +49 2308 9337285
christian.schimke@euchner.de

Essen
Thomas Kreißl
fördern - steuern - regeln
Hackenberghang 8a
45133 Essen
Tel. +49 201 84266-0
Fax +49 201 84266-66
info@kreissl-essen.de

Freiburg
EUCHNER GmbH + Co. KG
Ingenieur- und Vertriebsbüro
Steige 5
79206 Breisach
Tel. +49 7664 403833
Fax +49 7664 403834
peter.seifert@euchner.de

Lübeck
EUCHNER GmbH + Co. KG
Ingenieur- und Vertriebsbüro
Am Stadtrand 13
23556 Lübeck
Tel. +49 451 88048371
Fax +49 451 88184364
martin.pape@euchner.de

Nürnberg
EUCHNER GmbH + Co. KG
Ingenieur- und Vertriebsbüro
Steiner Straße 22a
90522 Oberasbach
Tel. +49 911 6693829
Fax +49 911 6696722
ralf.paulus@euchner.de

Stuttgart
EUCHNER GmbH + Co. KG
Ingenieur- und Vertriebsbüro
Kohlhammerstraße 16
70771 Leinfelden-Echterdingen
Tel. +49 711 7597-0
Fax +49 711 7597-303
oliver.laier@euchner.de
uwe.kupka@euchner.de

Wiesbaden
EUCHNER GmbH + Co. KG
Ingenieur- und Vertriebsbüro
Adolfsallee 3
65185 Wiesbaden
Tel. +49 611 98817644
Fax +49 611 98895071
giancarlo.pasquesi@euchner.de

09/19

EUCHNER

More than safety.

Support hotline

You have technical questions about our products or how they can be used?
For further questions please contact your local sales representative.

Comprehensive download area

You are looking for more information about our products?
You can simply and quickly download operating instructions, CAD or ePLAN data and accompanying software for our products at www.euchner.com.

Customer-specific solutions

You need a specific solution or have a special requirement?
Please contact us. We can manufacture your custom product even in small quantities.

EUCHNER near you

You are looking for a contact at your location? Along with the headquarters in Leinfelden-Echterdingen, the worldwide sales network includes 18 subsidiaries and numerous representatives in Germany and abroad – you will definitely also find us near you.

www.euchner.com

EUCHNER GmbH + Co. KG
Kohlhammerstraße 16
70771 Leinfelden-Echterdingen
Germany
Tel. +49 711 7597-0
Fax +49 711 753316
info@euchner.de
www.euchner.com

EUCHNER
More than safety.